APLISENS®

2022-2023

PRODUCT CATALOGUE

PRESSURE
FLOW
LEVEL
TEMPERATURE

Chapters

I Devices for measurement of pressure or level in open tanks

II Devices for measurement of differential pressure or level in pressure tanks

III Diaphragm seals

IV Valves and fitting accessories

V Hydrostatic level probes, hydrostatic density transmitter

VI Digital indicators

VII Power supplies, isolators, signal converters, overvoltage protection

VIII Flow measurement

IX Temperature transmitters

X Temperature sensors

XI Electropneumatic positioner

XII Hart communication tools

Chapter I
Devices for measurement of pressure or level in open tanks

Smart pressure transmitter APC-2000ALW .....I/ 2

Pressure transmitter PCE-28.Smart.....I/ 7

Pressure transmitter PCE-28.Smart/Exd.....I/ 10

Pressure transmitter PCE-28.Modbus.....I/ 13

Pressure transmitter PCE-28 .....I/ 16

Pressure transmitter PCE-28/Exd .....I/ 19

Pressure transmitter PC-29.....I/ 21

Pressure transmitter AS .....I/ 23

Industrial pressure gauge MS-100K.....I/ 24

Pressure gauge with diaphragm seal MS-100.....I/ 25

SMART PRESSURE TRANSMITTER
APC-2000ALW

HART COMMUNICATION PROTOCOL

- ✓ **4…20 mA output signal + HART 5 / HART 7 protocol (special version: 0…20 mA or 0…5 mA output signal + HART 5 protocol)**
- ✓ **Display with backlight**
- ✓ **Programmable range, zero shift, characteristic and damping ratio with local panel keys**
- ✓ **Safety version SIL2/SIL3**
- ✓ **Intrinsic safety certificate ATEX, IECEx, FM (USA, Canada)**
- ✓ **Explosion proof certificate ATEX, IECEx, FM (USA, Canada)**
- ✓ **Marine certificate – DNV, BV**
- ✓ **Accuracy 0,075% (0,05%, 0,04% on request)**
- ✓ **Gold plated diaphragm (Au)**
- ✓ **MID (Measuring Instruments Directive) – certificate acc. to 2004/22/WE directive and OIML R140:2007 recommendations.**

up to 5 years warranty

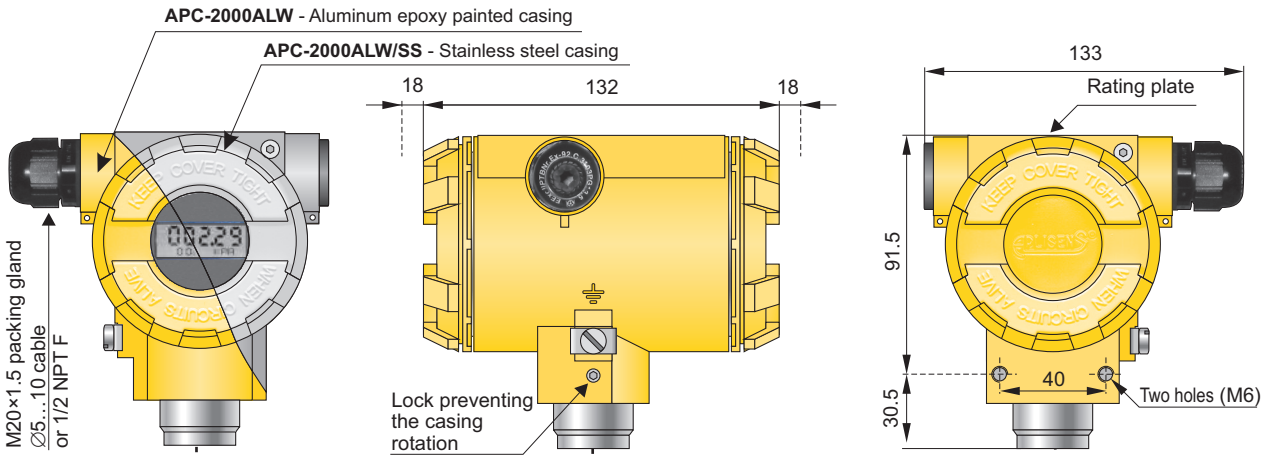

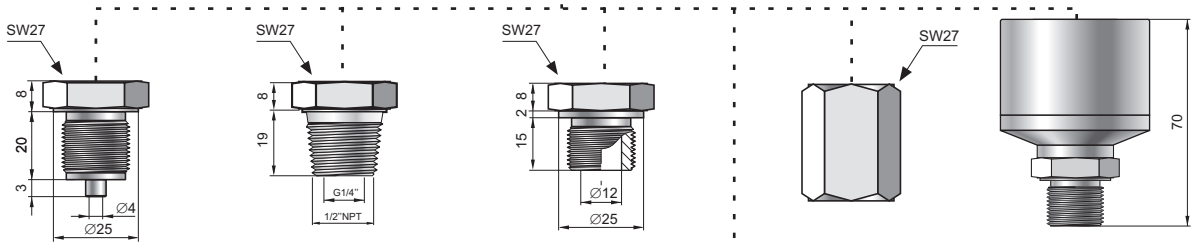

G1/2 type
G1/2″, Ø4 hole
M type
M20×1.5, Ø4 hole

1/2"NPT M type
1/2"NPT male +
internal thread G1/4"

GP type
G1/2″, Ø12 hole
P type
M20×1.5, Ø12 hole

1/2"NPT F type
internal thread
1/2-14NPT

GP type
P type
1/2"NPT M type
for HS version

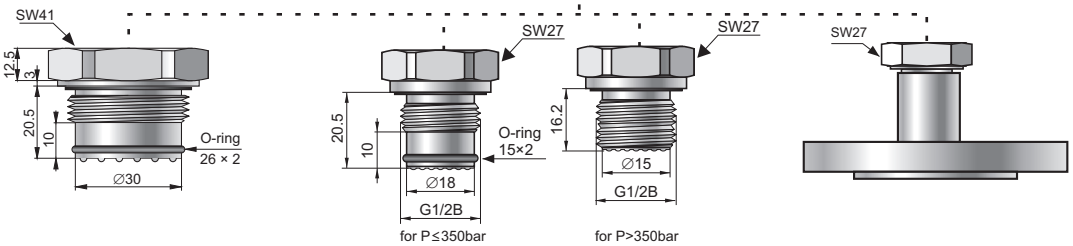

CG1 type
G1″ with flush diaphragm

CG1/2 type
G1/2″ with flush diaphragm

Version with direct or remote diaphragm seal
Diaphragm seal data - see chapter III

Application and construction

Smart pressure transmitters are applicable to the measurement of the pressure, underpressure and absolute pressure of gases, vapours and liquids. The active sensing element is a piezoresistant silicon sensor separated from the medium by a diaphragm and by specially selected type of manometric liquid. The casing is made of aluminium alloy cast or 316SS stainles steel, degree of protection IP66/IP67. The design of the casing enables the use of a local display, rotation of the display, rotation of the casing by 0–340° relative to the sensor, and a choice of cable direction.

The communication standard for data interchange with the transmitter is the Hart protocol.

Communication with the transmitter is carried out with:

– a KAP-03, KAP-03Ex communicator
– some other Hart type communicators,(*)
– a PC using an HART/USB converter and Raport 2 configuration software.

(*) .eddl files available on www.aplisens.com.

The data interchange with the transmitter enables users to:

- identify the transmitter
- configure the output parameters:
  - measurement units and the values of the start points and end points at the measurement range
  - damping time constant
  - conversion characteristic (inversion, user's non-linear characteristic)
- read the currently measured pressure value of the output current and the percentage output control level
- force an output current with a set value
- calibrate the transmitter in relation to a model pressure

Installation

The transmitter can be installed directly on the installation. An universal mounting bracket is provided to transmitter fitting on 2″ pipe (the AL mounting bracket, see page IV/ 5). When the pressure of steam or other hot media is measured, a siphon or impulse line should be used. The needle valve placed upstream the transmitter simplifies installation process and enables the zero point adjustment or the transmitter replacement. When the special process connections are required for the measurement of levels and pressures (e.g. at food and chemical industries), the transmitter is provided with an Aplisens diaphragm seal. Installing accessories and a full scope of diaphragm seals are described in detail in the further part of the catalogue. The transmitter's electrical connections should be performed with twisted cable. The place for the communicator should be assigned before the communicator installation.

Measuring ranges

No.	Nominal measuring range (FSO)		Minimum set range		Rangeability	Overpressure limit (without hysteresis)****	
1	0…1000 bar	(0…100 MPa)	10 bar	(1 MPa)	100:1	1200 bar	(120 MPa)
2	0…600 bar	(0…60 MPa)	6 bar	(600 kPa)	100:1	1000 bar	(100 MPa)
3	0…300 bar **	(0…30 MPa)	3 bar	(300 kPa)	100:1	450 bar	(45 MPa)
4	0…160 bar **	(0…16 MPa)	1,6 bar	(160 kPa)	100:1	450 bar	(45 MPa)
5	0...70 bar **	(0...7 MPa)	0,7 bar	(70 kPa)	100:1	140 bar	(14 MPa)
6	-1..70 bar **	(-0,1...7 MPa)	0,71 bar	(71 kPa)	100:1	140 bar	(14 MPa)
7	0...25 bar **	(0...2,5 MPa)	0,25 bar	(25 kPa)	100:1	50 bar	(5 MPa)
8	-1...25 bar **	(-0,1...2,5 MPa)	0,26 bar	(26 kPa)	100:1	50 bar	(5 MPa)
9	0...7 bar **	(0...0,7 MPa)	0,07 bar	(7 kPa)	100:1	14 bar	(1,4 MPa)
10	-1…7 bar **	(-100…700 kPa)	0,08 bar	(8 kPa)	100:1	14 bar	(1,4 MPa)
11	-1…1,5 bar **	(-100…150 kPa)	0,12 bar	(12 kPa)	20:1	4 bar	(400 kPa)
12	0...2 bar **	(0...200 kPa)	100 mbar	(10 kPa)	20:1	4 bar	(400 kPa)
13	0...1 bar **	(0...100 kPa)	50 mbar	(5 kPa)	20:1	2 bar	(200 kPa)
14	-0,5...0,5 bar **	(-50...50 kPa)	50 mbar	(5 kPa)	20:1	2 bar	(200 kPa)
15	0...0,25 bar **	(0...25 kPa)	25 mbar	(2,5 kPa)	10:1	1 bar	(100 kPa)
16	-100...100 mbar **	(-10...10 kPa)	20 mbar	(2 kPa)	10:1	1 bar	(100 kPa)
17	-15...70 mbar */**	(-1,5...7 kPa)	5 mbar	(0,5 kPa)	17:1	0,5 bar	(50 kPa)
18	-25…25 mbar */***	(-2,5...2,5 kPa)	2 mbar	(0,2 kPa)	25:1	0,5 bar	(50 kPa)
19	-7…7 mbar */***	(-0,7..0,7 kPa)	1 mbar	(0,1 kPa)	14:1	0,5 bar	(50 kPa)
20	0...1,3 bar abs	(0...130 kPa abs)	100 mbar abs	(10 kPa abs)	13:1	2 bar	(200 kPa)
21	0...7 bar abs	(0...0,7 MPa abs)	100 mbar abs	(10 kPa abs)	70:1	14 bar	(1,4 MPa)
22	0...25 bar abs	(0...2,5 MPa abs)	0,25 bar abs	(25 kPa abs)	100:1	50 bar	(5 MPa)
23	0...70 bar abs	(0...7 MPa abs)	0,7 bar abs	(70 kPa abs)	100:1	140 bar	(14 MPa)
24	0...300 bar abs	(0...30 MPa abs)	3 bar abs	(300 kPa abs)	100:1	450 bar	(45 MPa)

* *transmitters not available with diaphragm seal; explosion proof version - available only Exd (2G)*
** *transmitters available in HS version*
*** *transmitters available only in HS version*
**** *overpressure limit can be different for version according to 2014/68/EU PED*

Technical data

Metrological parameters

Accuracy ≤ ±0,075% of the calibrated range (≤ ±0,1% for range no. 19)
Special version: ≤ ±0,05% of the calibrated range (≤ ±0,04%, ≤ ±0,025% on request)

Long-term stability (for the nominal measuring range) ≤ accuracy for 3 years or ≤ 2 x accuracy for 5 years
HS version (ranges 3÷15): ≤ accuracy for 6 years or ≤ 2 x accuracy for 10 years

Thermal error < ±0,05% (FSO) / 10°C (0,1% for ranges no. 16÷19)
max. ±0.25% (FSO) in the whole compensation range (0,4% for ranges no. 16÷19)

Thermal compensation range -25...80°C
Special version: -40...80°C

Additional electronic damping 0...60 s

Error due to supply voltage changes 0,002% (FSO) / V

Electrical parameters

Version	Power supply
standard	10...55 VDC
Exia	10,5…30 VDC
IS	11,5…30 VDC
Exd, XP	13,5…55 VDC
Exia/Exd, IS/XP	11,5…30 VDC / 11,5…55 VDC
Safety, Safety Exd, Safety XP	11,5…36 VDC
Safety Exia, Safety IS	11,5…30 VDC
Safety Exia/Exd, Safety IS/XP	11,5…30 VDC / 11,5…36 VDC
MID Exia	13,5…28 VDC
MID Exd	13,5…45 VDC

Output signal 4...20 mA + HART

Load resistance (for standard version) $R[\Omega] \le \frac{U_{sup}[V]-10V}{0{,}0225A}$

Resistance required for communication min. 240 Ω

Materials

Wetted parts and diaphragms: 316Lss, Hastelloy C 276, Au

Casing: Aluminum, 316SS

Material of window: hardened glass

Operating conditions

Operating temperature range (ambient temp.)		-40...85°C
	Exia, IS version	-40…80°C
	Exd, XP version	-40…75°C
Medium temperature range		-40...120°C
	Safety:	-40…85°C
	PED:	-40…100°C

over 120°C – measurement with use an impulse line or diaphragm seal

CAUTION: the medium must not be allowed to freeze in the impulse line or close to the process connection of the transmitter

Accuracy depending on the set range

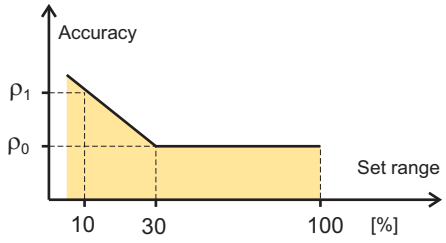

ρ_0 – error for range 30...100% FSO

ρ_1 – error for range 10% FSO

$\rho_1 = 2 \times \rho_0$

Numerical error values are given in the technical data under metrological parameters

SMART PRESSURE TRANSMITTER APC-2000ALW version with MID

Application

Smart pressure transmitter APC-2000ALW MID is applicable to the measurement of the pressure and absolute pressure in application designed according to directive 2004/22/EC (MID), harmonized standard PN-EN12405-1:2005 + A2:2010 and recommendation OIML R140:2007. Device subcomponent suitable for custody transfer measurement of gas with MID approval. Mechanical construction and installation of the transmitter enclosure shall comply with the transmitter APC-2000ALW are described on page I/ 3 of catalogue. Pressure transmitters APC-2000ALW MID are produced only with nominal ranges according to the table. Transmitter due to factory blockade of transmitter's configuration cannot be configurable by user. Electrical connection of the transmitter is according to drawing on page I/ 3. Available are only terminals SIGNAL + and SIGNAL -.

Metrological parameters

Max. permissible error according to EN12405-1 (calculated in relation to the measured value)

- in reference conditions	≤ 0,2%
- nominal operating conditions	≤ 0,5%
special version	≤ 0,3%
Long-term stability	< 0,5% / 5 years
Operating temperature range	-25...55°C
Power supply	Exia: 13,5...28 VDC Exd: 13,5...45 VDC

MID Parts Cerfificate No. 27/12

Measuring ranges

Nominal measuring range		Overpressure limit (without hysteresis)	
10÷100 bar ABS	(1÷10 MPa ABS)	450 bar	(45 MPa)
2÷20 bar ABS	(0,2÷2 MPa ABS)	50 bar	(5 MPa)
2÷20 bar	(0,2÷2 MPa)	50 bar	(5 MPa)
0,9÷7 bar ABS	(0,09÷0,7 MPa ABS)	14 bar	(1,4 MPa)
0,9÷7 bar	(0,09÷0,7 MPa)	14 bar	(1,4 MPa)

Ordering procedure of MID version

Model	Code	Description
APC-2000		Smart pressure transmitter
Casing, output signal	/ALW	Aluminum housing, IP66/IP67, with display, output 4-20mA + Hart
	/MID	**MID** – certificate acc. to 2004/22/EC directive and OIML R140:2007 recommendations
Versions, certificates	/Exia	Ex II 1/2G Ex ia IIC T4/T5 Ga/Gb , II 1 D Ex ia IIIC T105°C Da
	/Exd	Ex II 1/2G Ex ia/db IIC T5/T6 Ga/Gb, II 1/2D Ex ia/tb IIIC T85°C /T100°C Da/Db
Nominal measuring range	/10÷100 bar ABS	10÷100 bar ABS (1÷10 MPa ABS) with possibility of changing, min. range 10÷70 bar ABS (1÷7 MPa ABS)
	/2÷20 bar ABS	2÷20 bar ABS (0,2÷2 MPa ABS)
	/2÷20 bar	2÷20 bar (0,2÷2 MPa)
	/0,9÷7 bar ABS	0,9÷7 bar ABS (0,09÷0,7 MPa ABS)
	/0,9÷7 bar	0,9÷7 bar (0,09÷0,7 MPa)
Process connections	/M	Thread M20x1,5 (male) with ∅4 hole, wetted parts SS316L
	/G1/2	Thread G1/2'' (male) with ∅4 hole, wetted parts SS316L
	/G1/2(Au)	Thread G1/2'' (male) with ∅4 hole, gold plated diaphragm
	/P	Thread M20x1,5 (male) with ∅12 hole, wetted parts SS316L
	/GP	Thread G1/2'' (male) with ∅12 hole, wetted parts SS316L
	/1/2"NPTM	Thread 1/2''NPT Male, wetted parts SS316L
	/1/2"NPTF	Thread M20x1,5 with adapter to 1/2"NPT Female, wetted parts SS316L
Electrical connection	(without marking)	Packing gland M20x1,5
	/US	Thread 1/2"NPT Female
Accessories	/AL	Mounting bracket type AL for 2" pipe, material zinced steel
	/AL(SS)	Mounting bracket type AL for 2" pipe, material stainless steel
	/ST	Stainless Steel plate riveted to the housing
	/MT	Stainless Steel Tag plate mounted on wire

Ordering procedure

Model	Code	Description
APC-2000		Smart pressure transmitter
Versions	/ALW	With display, output 4-20mA + Hart
	/ALW/Safety	With display, output 4-20mA + Hart Functional Safety certificate according to PN-EN 61508:2010 parts 1 ÷ 7, PN-EN 61511-1:2017 + PN-EN 61511-1:2017/A1:2018-03, PN-EN 62061:2008 + PN-EN 62061:2008/A1:2013-06 + PN-EN 62061:2008/A2:2016-01
Certificates, options*	/SS	Stainless steel housing
	/Exia	II 1/2G Ex ia IIC T4/T5 Ga/Gb IECEx Ex ia IIC T4/T5 Ga/Gb
	/Exia (Da)	II 1/2G Ex ia IIC T4/T5 Ga/Gb II 1D Ex ia IIIC T105°C Da I M1 Ex ia I Ma (version with SS housing) Ex ia IIC T4/T5 Ga/Gb IECEx Ex ia IIIC T105°C Da Ex ia I Ma (version with SS housing)
	/IS	IS Class I, Div 1, Groups A, B, C, D T4 IS Class II, Div 1, Groups E, F, G T5 IS Class III, Div 1, T5 Zone 0 AEx/Ex ia IIC T4 Ga Zone 20 AEx/Ex ia IIIC T105°C Da
	/Exd	II 1/2G Ex ia/db IIC T6/T5 Ga/Gb II 1/2D Ex ia/tb IIIC T105°C Da/Db I M2 Exd ia I Mb (version with SS housing) Ex ia/db IIC T6/T5 Ga/Gb IECEx Ex ia/tb IIIC T105°C Da/Db Ex db ia I Mb (version with SS housing) not available for ranges no. 17÷19 Packing gland available on request
	/Exd (2G)	II 2G Ex ia/db IIC T6/T5 Gb II 2D Ex ia/tb IIIC T105°C Db IECEx Ex ia/db IIC T6/T5 Gb Ex ia/tb IIIC T105°C Db Packing gland available on request
	/XP	XP Class I, Div 1, Groups A, B, C, D T5 DIP Class II, Div 1, Groups E, F, G T5 DIP Class III, Div 1, T5 Zone 1 AEx db ia IIC T5 Gb Zone 21 AEx ia tb IIIC T105°C Db Packing gland available on request
	/XPC	XP Class I, Div 1, Groups B, C, D T5 DIP Class II, Div 1, Groups E, F, G T5 DIP Class III, Div 1, T5 Zone 1 AEx/Ex db ia IIC T5 Gb Zone 21 AEx/Ex ia tb IIIC T105°C Db Packing gland available on request
	/Exia(Da)/Exd	Dual certification Exia(Da) and Exd
	/Exia(Da)/Exd(2G)	Dual certification Exia(Da) and Exd(2G)
	/IS/XP	Dual certification IS and XP and for US
	/IS/XPC	Dual certification IS and XPC for US and Canada
	/SA	Surge arrester for Exia version
	/PED	PED category I
	/HS	Ultra stable version (only ranges no. 3÷19, process connection: P, GP, 1/2"NPTM)
	/0,05%	Accuracy ≤ ±0,05%
	/MR	Marine certificate – DNV, BV
	/Tlen	For oxygen service (sensor filled with Fluorolube fluid), only G1/2" connection
	/-40…80°C	Extended thermal compensation range -40 ÷ 80°C
	/IP67	Protection class IP67
	/NACE	NACE MR-01-75 certificate (process connections: M, G1/2", P, GP and 1/2"NPTM)
	/Hart 7	Communication protocol HART in revision 7

* more than one option is available

		Range	Min. set range
Nominal measuring range	/0÷1000 bar	0÷1000 bar (0÷100 MPa)	10 bar (1 MPa)
	/0÷600 bar	0÷600 bar (0÷60 MPa)	6 bar (600 kPa)
	/0÷300 bar	0÷300 bar (0÷30 MPa)	3 bar (300 kPa)
	/0÷160 bar	0÷160 bar (0÷16 MPa)	1,6 bar (160 kPa)
	/0÷70 bar	0÷70 bar (0÷7 MPa)	0,7 bar (70 kPa)
	/-1÷70 bar	-1÷70 bar (-0,1÷7 MPa)	0,71 bar (71 kPa)
	/0÷25 bar	0÷25 bar (0÷2,5 MPa)	0,25 bar (25 kPa)
	/-1÷25 bar	-1÷25 bar (-0,1÷2,5 MPa)	0,26 bar (26 kPa)
	/0÷7 bar	0÷7 bar (0÷700 kPa)	0,07 bar (7 kPa)
	/-1÷7 bar	-1÷7 bar (-100÷700 kPa)	0,07 bar (7 kPa)
	/-1÷1,5 bar	-1÷1,5 bar (-100÷150 kPa)	120 mbar (12 kPa)
	/0÷2 bar	0÷2 bar (0÷200 kPa)	100 mbar (10 kPa)
	/0÷1 bar	0÷1 bar (0÷100 kPa)	50 mbar (5 kPa)
	/-0,5÷0,5 bar	-0,5÷0,5 bar (-50÷50k Pa)	50 mbar (5 kPa)
	/0÷0,25 bar	0÷0,25 bar (0÷25 kPa)	25 mbar (2,5 kPa)
	/-100÷100 mbar	-100÷100 mbar (-10÷10 kPa)	20 mbar (2 kPa)
	/-15÷70 mbar	-15÷70 mbar (-1,5÷7 kPa)	5 mbar (0,5 kPa)
	/-25÷25 mbar	-25÷25 mbar (-2,5÷2,5 kPa)	2 mbar (0,2 kPa)
	/-7÷7 mbar	-7÷7 mbar (-0,7÷0,7 kPa)	1 mbar (0,1 kPa)
	/0÷1,3 bar ABS	0÷1,3 bar ABS (0÷130 kPa ABS)	0,1 bar ABS (10 kPa ABS)
	/0÷7 bar ABS	0÷7 bar ABS (0÷700 kPa ABS)	0,1 bar ABS (10 kPa ABS)
	/0÷25 bar ABS	0÷25 bar ABS (0÷2,5 MPa ABS)	0,25 bar ABS (25 kPa ABS)
	/0÷70 bar ABS	0÷70 bar ABS (0÷7 MPa ABS)	0,7 bar ABS (70 kPa ABS)
	/0÷300 bar ABS	0÷300 bar ABS (0÷30 MPa ABS)	0,3 bar ABS (30 kPa ABS)
Measuring set range	/…÷… [required units]	Calibrated range in relation to 4mA and 20mA output	

See next page

Code		Description
Process connections	/M……	Thread M20x1,5 (male) with ∅4 hole, wetted parts SS316L
	/G1/2……	Thread G1/2'' (male) with ∅4 hole, wetted parts SS316L
	/G1/2(Au)……	Thread G1/2'' (male) with ∅4 hole, gold plated diaphragm (range no. 1, 2, 3, 4, 5)
	/P……	Thread M20x1,5 (male) with ∅12 hole, wetted parts SS316L } Not available with range no. 1, 2
	/GP……	Thread G1/2'' (male) with ∅12 hole, wetted parts SS316L } Not available with range no. 1, 2
	/GP(Hastelloy)……	Thread G1/2'' (male) with ∅12 hole, wetted parts Hastelloy C 276 } Not available with range no. 1, 2
	/CG1"……	Thread G1'' with flush diaphragm, wetted parts SS316L (Pressure limits: min. 0,1bar / max. 70bar)
	/CG1"(Hastelloy)……	Thread G1'' with flush diaphragm, wetted parts Hastelloy C 276 (Pressure limits: min. 0,1bar / max. 70bar)
	/CG1/2"……	Thread G1/2'' with flush diaphragm, wetted parts SS316L (Pressure limits: min. 2,5bar)
	/1/2"NPTM……	Thread 1/2''NPT Male, G1/4" Female, wetted parts SS316L (Pressure limits: 1/2"NPT Male max. 690bar, G1/4" Female max. 1000bar)
	/1/2"NPTM(Hastelloy)……	Thread 1/2''NPT Male, G1/4" Female, wetted parts Hastelloy C 276 (Only nominal range 0…300bar)
	/1/2"NPTF……	Thread G1/2" or M20x1,5 with adapter to 1/2"NPT Female, wetted parts SS316L (Pressure limits: max. 690bar)
	/code of diaphragm seal……	Diaphragm seal (see chapter of diaphragm seals)
Electrical connection	(without marking)	Packing gland M20x1,5
	/US……	Thread 1/2"NPT Female
Accessories	/AL……	Mounting bracket type AL for 2" pipe, material zinced steel
	/AL(SS)……	Mounting bracket type AL for 2" pipe, material ss304
	/AL(SS316)……	Mounting bracket type AL for 2" pipe, material ss316
	/ST……	Stainless Steel plate fixed to the housing
	/MT……	Stainless Steel Tag plate mounted on wire

Standard display configuration

	Std. version	Exia, Exia(Da)	IS	Exd	XP	Exia(Da)/Exd, IS/XP	Safety	MID
Backlight on	•	•		•				•
Backlight off			•		•	•	•	

Other configuration of display has to be marked upon placing order. User has no possibility of switching backlight on/off.

Example: Pressure transmitter, output 4...20mA + HART, version Exia, nominal measuring range 0...7bar, calibrated range 0…6bar, process connection 1/2"NPT male, electrical connection 1/2"NPTF.

APC-2000ALW/Exia/0..7bar/0..6bar/PD/1/2''NPTM/US

SMART PRESSURE TRANSMITTER PCE-28.SMART

HART COMMUNICATION PROTOCOL

- ✓ **4…20 mA output signal + HART protocol**
- ✓ **Intrinsic safety certificate (ATEX, IECEx)**
- ✓ **Accuracy 0.1%**
- ✓ **Marine certificate – DNV, BV**

PD type
PD316 type
IP65

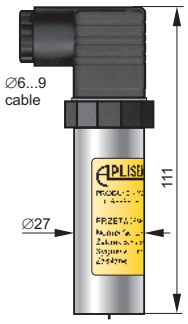

PZ type
PZ316 type
IP66

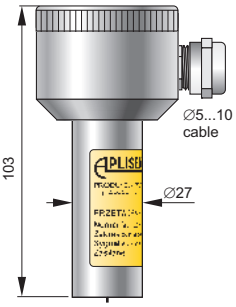

PM12 type
IP65

PM12(IP67)
type
IP67

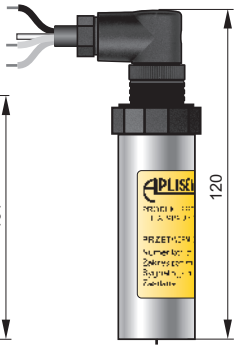

PKD type
IP67

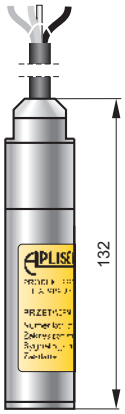

SG type
IP68

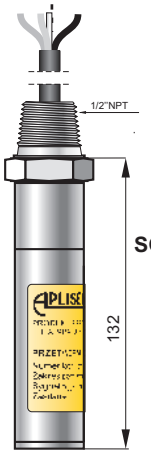

SGM type
IP68

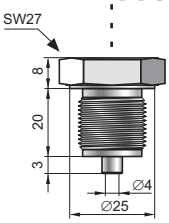

G1/2 type
G1/2″, ∅4 hole
M type
M20×1.5, ∅4 hole

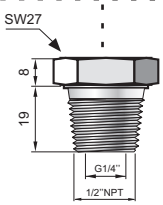

1/2"NPT type
1/2"NPT male +
internal thread G1/4"

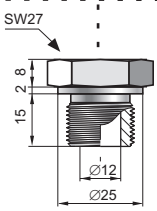

GP type
G1/2″, ∅12 hole
P type
M20×1.5, ∅12 hole

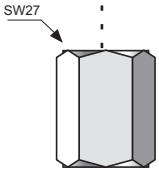

1/2"NPT F type
internal thread 1/2-14NPT
1/4"NPT F type
internal thread 1/4-18NPT

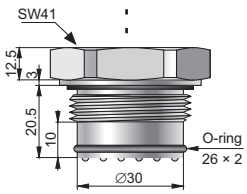

CG1 type
G1″ with flush
diaphragm

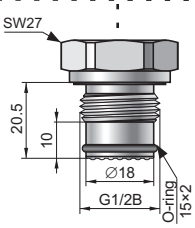

CG1/2 type
G1/2″ with
flush diaphragm
for P≤350bar

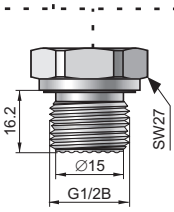

CG1/2B type
G1/2″ with
flush diaphragm
for P>350bar

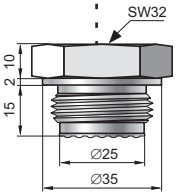

CM30×2 type
M30×2 with flush
diaphragm

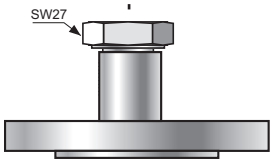

Version with direct
or remote
diaphragm seal
Diaphragm seal data -
see chapter III

Application

PCE-28.SMART pressure transmitter is applicable to the measurement of the pressure, underpressure and absolute pressure of gases, vapours and liquids. The active sensing element is a piezoresistant silicon sensor separated from the medium by a diaphragm and by specially selected type of manometric liquid.

Communication

The communication standard for data interchange with the transmitter is the Hart protocol.

Communication with the transmitter is carried out with:

– a KAP-03, KAP-03Ex communicator
– some other Hart type communicators,(*)
– a PC using an HART/USB converter and Raport 2 configuration software.

(*) .eddl files available on www.aplisens.com.

The data interchange with the transmitter enables users to:

- ♦ identify the transmitter
- ♦ configure the output parameters:
  - measurement units and the values of the start points and end points at the measurement range
  - damping time constant
  - conversion characteristic (inversion, user's non-linear characteristic)
- ♦ read the currently measured pressure value of the output current and the percentage output control level
- ♦ force an output current with a set value
- ♦ calibrate the transmitter in relation to a model pressure

Installation

The transmitter is not heavy, so it can be installed on the installation without additional mounting bracket. When the pressure of steam or other hot media is measured, a siphon or impulse line should be used. The needle valve placed upstream the transmitter simplifies installation process and enables the zero point adjustment or the transmitter replacement. The transmitter's electrical connections should be performed with twisted cable. The place for the communicator should be assigned before the communicator installation.

Measuring ranges

No.	Nominal measuring range (FSO)		Minimum set range		Rangeability	Overpressure limit (without hysteresis)***	
1	0…1000 bar	(0…100 MPa)	10 bar	(1 MPa)	100:1	1200 bar	(120 MPa)
2	0…600 bar	(0…60 MPa)	6 bar	(600 kPa)	100:1	1000 bar	(100 MPa)
3	0…300 bar	(0…30 MPa)	3 bar	(300 kPa)	100:1	450 bar	(45 MPa)
4	0…160 bar	(0…16 MPa)	1,6 bar	(160 kPa)	100:1	450 bar	(45 MPa)
5	0...70 bar	(0...7 MPa)	0,7 bar	(70 kPa)	100:1	140 bar	(14 MPa)
6	-1...70 bar	(-0,1...7 MPa)	0,71 bar	(71 kPa)	100:1	140 bar	(14 MPa)
7	0...25 bar	(0...2,5 MPa)	0,25 bar	(25 kPa)	100:1	50 bar	(5 MPa)
8	-1...25 bar	(-0,1...2,5 MPa)	0,26 bar	(26 kPa)	100:1	50 bar	(5 MPa)
9	0...7 bar	(0...0,7 MPa)	0,07 bar	(7 kPa)	100:1	14 bar	(1,4 MPa)
10	-1…7 bar	(-100…700 kPa)	0,07 bar	(7 kPa)	114:1	14 bar	(1,4 MPa)
11	-1…1,5 bar	(-100…150 kPa)	0,12 bar	(12 kPa)	20:1	4 bar	(400 kPa)
12	0...2 bar	(0...200 kPa)	100 mbar	(10 kPa)	20:1	4 bar	(400 kPa)
13	0...1 bar	(0...100 kPa)	50 mbar	(5 kPa)	20:1	2 bar	(200 kPa)
14	-0,5...0,5 bar	(-50...50 kPa)	50 mbar	(5 kPa)	20:1	2 bar	(200 kPa)
15	0...0,25 bar	(0...25 kPa)	25 mbar	(2,5 kPa)	10:1	1 bar	(100 kPa)
16	-100...100 mbar	(-10...10 kPa)	20 mbar	(2 kPa)	10:1	1 bar	(100 kPa)
17	-15...70 mbar *	(-1,5...7 kPa)	5 mbar	(0,5 kPa)	17:1	0,5 bar	(50 kPa)
18	0...1,3 bar abs	(0...130 kPa abs)	100 mbar abs	(10 kPa abs)	13:1	2 bar	(200 kPa)
19	0...7 bar abs	(0...0,7 MPa abs)	100 mbar abs	(10 kPa abs)	70:1	14 bar	(1,4 MPa)
20	0...25 bar abs	(0...2,5 MPa abs)	0,25 bar abs	(25 kPa abs)	100:1	50 bar	(5 MPa)
21	0...70 bar abs	(0...7 MPa abs)	0,7 bar abs	(70 kPa abs)	100:1	140 bar	(14 MPa)
22	0...300 bar abs	(0...30 MPa abs)	3 bar abs	(300 kPa abs)	100:1	450 bar	(45 MPa)

* *only for tranmitters without diaphragm seal*

Technical data

Metrological parameters

Accuracy ≤ ±0,1% of calibrated range

Long-term stability (for the basic range) ≤ accuracy for 3 years

Thermal error < ±0,08% (FSO) / 10°C (0,1% for ranges no. 16, 17)
max. ±0,25% (FSO) in the whole compensation range (0,4% for ranges 16, 17)

Thermal compensation range -25...80°C
-40...80°C – special version

Additional electronic damping 0...30 s

Error due to supply voltage changes 0.002% (FSO) / V

Electrical parameters

Power supply 7,5...55 V DC (Ex 7,5...30 V DV)

Output signal 4...20 mA, two wire transmission

Load resistance $R[\Omega] \le \frac{U_{sup}[V] - 7{,}5V}{0{,}0225A}$

Resistance required for communication min. 240Ω

Materials

Wetted parts and diaphragms: 316Lss, Hastelloy C 276, Au

Casing: 304ss
Optional: 316ss

Operating conditions

Operating temperature range (ambient temp.) -40...85°C
Exia version: -40…80°C

Medium temperature range -40...120°C

over 120°C – measurement with use an impulse line or diaphragm seals

CAUTION: the medium must not be allowed to freeze in the impulse line or close to the process connection of the transmitter

Ordering procedure

Model	Code	Description
PCE-28.SMART		Smart pressure transmitter
Versions, certificates	/Exia	II 1/2G Ex ia IIC T4/T5/T6 Ga/Gb II 1D Ex ia IIIC T105°C Da I M1 Ex ia I Ma IECEx: Ex ia IIC T4/T5/T6 Ga/Gb Ex ia IIIC T105°C Da Ex ia I Ma For PM12, PKD version: II 1/2G Ex ia IIC T4/T5/T6 Ga/Gb IECEx: Ex ia IIC T4/T5/T6 Ga/Gb For ALW, ALM version: II 1/2G Ex ia IIC T4 Ga/Gb II 1D Ex ia IIIC T105°C Da IECEx: Ex ia IIC T4 Ga/Gb Ex ia IIIC T105°C Da
more than one option is available	/MR	Marine certificate – DNV, BV (not available in ALW and ALM version)
	/Tlen	For oxygen service (sensor filled with Fluorolube fluid), only G1/2" connection
	/-40…+80°C	Extended thermal compensation range -40 ÷ 80°C
	/NACE	NACE MR-01-75 certificate (process connections: M, G1/2", P, GP and 1/2"NPTM)

Nominal measuring range	Range	Min. set range
/0÷1000 bar	0÷1000 bar (0÷100 MPa)	10 bar (1 MPa)
/0÷600 bar	0÷600 bar (0÷60 MPa)	6 bar (600 kPa)
/0÷300 bar	0÷300 bar (0÷30 MPa)	3 bar (300 kPa)
/0÷160 bar	0÷160 bar (0÷16 MPa)	1,6 bar (160 kPa)
/0÷70 bar	0÷70 bar (0÷7 MPa)	0,7 bar (70 kPa)
/-1÷70 bar	-1÷70 bar (-0,1÷7 MPa)	0,71 bar (71 kPa)
/0÷25 bar	0÷25 bar (0÷2,5 MPa)	0,25 bar (25 kPa)
/-1÷25 bar	-1÷25 bar (-0,1÷2,5 MPa)	0,26 bar (26 kPa)
/0÷7 bar	0÷7 bar (0÷700 kPa)	0,07 bar (7 kPa)
/-1÷7 bar	-1÷7 bar (-100÷700 kPa)	0,07 bar (7 kPa)
/-1÷1,5 bar	-1÷1,5 bar (-100÷150 kPa)	120 mbar (12 kPa)
/0÷2 bar	0÷2 bar (0÷200 kPa)	100 mbar (10 kPa)
/0÷1 bar	0÷1 bar (0÷100 kPa)	50 mbar (5 kPa)
/-0,5÷0,5 bar	-0,5÷0,5 bar (-50÷50k Pa)	50 mbar (5 kPa)
/0÷0,25 bar	0÷0,25 bar (0÷25 kPa)	25 mbar (2,5 kPa)
/-100÷100 mbar	-100÷100 mbar (-10÷10 kPa)	20 mbar (2 kPa)
/-15÷70 mbar	-15÷70 mbar (-1,5÷7 kPa)	5 mbar (0,5 kPa)
/0÷1,3 bar ABS	0÷1,3 bar ABS (0÷130 kPa ABS)	0,1 bar ABS (10 kPa ABS)
/0÷7 bar ABS	0÷7 bar ABS (0÷700 kPa ABS)	0,1 bar ABS (10 kPa ABS)
/0÷25 bar ABS	0÷25 ABS (0÷2,5 MPa ABS)	0,25 bar ABS (25 kPa ABS)
/0÷70 bar ABS	0÷70 bar ABS (0÷7 MPa ABS)	0,7 bar ABS (70 kPa ABS)
/0÷300 bar ABS	0÷300 bar ABS (0÷30 MPa ABS)	0,3 bar ABS (30 kPa ABS)

Measuring set range	/…÷… [required units]	Calibrated range in relation to 4mA and 20mA output
Casing, electrical connection	/PD	304SS housing. IP65 with DIN EN 175301-803 connector
	/PD316	316LSS housing, IP65 with DIN EN 175301-803 connector
	/PZ	304SS housing, IP66, packing gland M20x1,5
	/PZ316	316SS housing, IP66, packing gland M20x1,5
	/PM12	304SS housing, IP65 with thread M12x1 (without cable and connector)
	/PM12 (IP67)	304SS housing, IP67 with thread M12x1 and connector with cable (3 m in standard)
	/PKD	304SS housing, IP67 cable electrical connection (3 m in standard)
	/SG	316LSS housing, IP68, cable electrical connection (3 m in standard)
	/SGM	316LSS housing, IP68, cable electrical connection (3 m in standard)
Process connections	/M	Thread M20x1,5 (male) with ∅4 hole, wetted parts SS316L
	/G1/2	Thread G1/2'' (male) with ∅4 hole, wetted parts SS316L
	/G1/2(Au)	Thread G1/2'' (male) with ∅4 hole, gold plated diaphragm (range no. 1, 2, 3, 4, 5)
	/G1/4	Thread G1/4'' (male), wetted parts SS316L (Pressure limits: max. 400bar)
	/P	Thread M20x1,5 (male) with ∅12 hole, wetted parts SS316L
	/GP	Thread G1/2'' (male) with ∅12 hole, wetted parts SS316L
	/GP(Hastelloy)	Thread G1/2'' (male) with ∅12 hole, wetted parts Hastelloy C 276 Not available with range no. 1, 2
	/CM30x2	Thread M30x2 with flush diaphragm, wetted parts SS316L (Pressure limits: min. 0,1bar / max. 70bar)
	/CM30x2(Hastelloy)	Thread M30x2 with flush diaphragm, wetted parts Hastelloy C 276 (Pressure limits: min. 0,1bar / max. 70bar)
	/CG1"	Thread G1'' with flush diaphragm, wetted parts SS316L (Pressure limits: min. 0,1bar / max. 70bar)
	/CG1"(Hastelloy)	Thread G1'' with flush diaphragm, wetted parts Hastelloy C 276 (Pressure limits: min. 0,1bar / max. 70bar)
	/CG1/2"	Thread G1/2'' with flush diaphragm, wetted parts SS316L (Pressure limits: min. 2,5bar / max. 350bar)
	/CG1/2"B	Thread G1/2'' with flush diaphragm, wetted parts SS316L (Pressure limits: min. 350bar)
	/1/2"NPTM	Thread 1/2''NPT Male, G1/4" Female, wetted parts SS316L (Pressure limits: 1/2"NPT Male max. 690bar, G1/4" Female max. 1000bar)
	/1/2"NPTF	Thread G1/2" or M20x1,5 with adapter to 1/2"NPT Female, wetted parts SS316L (Pressure limits: max. 690bar)
	/code of diaphragm seal…	Diaphragm seal (see chapter of diaphragm seals)
Accessories	/MT	Stainless Steel Tag plate mounted on wire
Other specification	/	Description of required parameters

Example: Pressure transmitter, output 4...20mA + HART, version Exia, nominal measuring range 0...7bar, calibrated range 0…6bar, process connection 1/2"NPT male, electrical connection DIN EN 175301-803 connector.

PCE-28.SMART/Exia/0..7bar/0..6bar/PD/1/2"NPTM

EXPLOSION PROOF SMART PRESSURE TRANSMITTER PCE-28.SMART/EXD

HART COMMUNICATION PROTOCOL

- ✓ **4…20 mA output signal + HART protocol**
- ✓ **Accuracy 0.1%**
- ✓ **NACE compatibility**
- ✓ **Measuring range up to 1380bar**

SGM (1/2"NPTM)
cable connection
IP68
(IP66 for gauge pressure <80bar)

FL (1/2"NPTM)
flying leads
IP68
(IP66 for gauge pressure <80bar)

PZ2
IP66

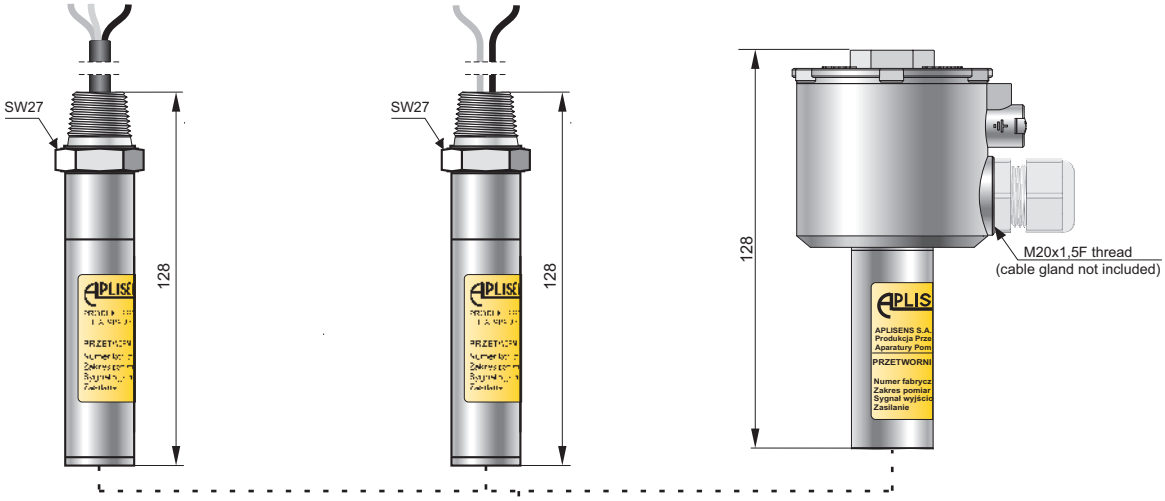

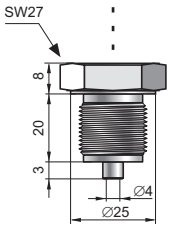

G1/2 type
G1/2″, ∅4 hole

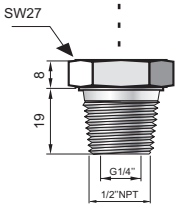

1/2"NPT type
1/2"NPT male +
internal thread G1/4"

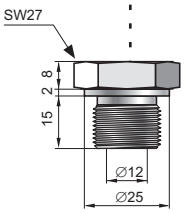

GP type
G1/2″, ∅12 hole

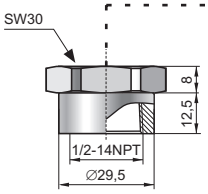

1/2NPTF type
1/2-14 NPT female

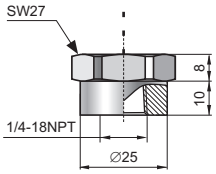

1/4NPTF type
1/4-18 NPT female

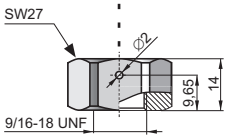

Autoclave
type F-250-C
(9/16-18 UNF)

Application

PCE-28.SMART pressure transmitter is applicable to the measurement of the pressure, underpressure and absolute pressure of gases, vapours and liquids. The active sensing element is a piezoresistant silicon sensor separated from the medium by a diaphragm and by specially selected type of manometric liquid.

Communication

The communication standard for data interchange with the transmitter is the Hart protocol.

Communication with the transmitter is carried out with:

– a KAP-03, KAP-03Ex communicator
– some other Hart type communicators,(*)
– a PC using an HART/USB converter and Raport 2 configuration software.

(*) .eddl files available on www.aplisens.com.

The data interchange with the transmitter enables users to:

- ♦ identify the transmitter
- ♦ configure the output parameters:
  - measurement units and the values of the start points and end points at the measurement range
  - damping time constant
  - conversion characteristic (inversion, user's non-linear characteristic)
- ♦ read the currently measured pressure value of the output current and the percentage output control level
- ♦ force an output current with a set value
- ♦ calibrate the transmitter in relation to a model pressure

Installation

The transmitter is not heavy, so it can be installed on the installation without additional mounting bracket. When the pressure of steam or other hot media is measured, a siphon or impulse line should be used. The needle valve placed upstream the transmitter simplifies installation process and enables the zero point adjustment or the transmitter replacement. The transmitter's electrical connections should be performed with twisted cable. The place for the communicator should be assigned before the communicator installation.

Measuring ranges

No.	Nominal measuring range (FSO)		Minimum set range		Rangeability	Overpressure limit (without hysteresis)***	
1	0…1380 bar	(0…138 MPa)	13,8 bar	(1,38 MPa)	100:1	1600 bar	(160 MPa)
2	0…1000 bar	(0…100 MPa)	10 bar	(1 MPa)	100:1	1000 bar	(100 MPa)
3	0…600 bar	(0…60 MPa)	6 bar	(600 kPa)	100:1	1200 bar	(120 MPa)
4	0…300 bar	(0…30 MPa)	3 bar	(300 kPa)	100:1	450 bar	(45 MPa)
5	0…160 bar	(0…16 MPa)	1,6 bar	(160 kPa)	100:1	450 bar	(45 MPa)
6	0...70 bar	(0...7 MPa)	0,7 bar	(70 kPa)	100:1	140 bar	(14 MPa)
7	-1...70 bar	(-0,1...7 MPa)	0,71 bar	(71 kPa)	100:1	140 bar	(14 MPa)
8	0...25 bar	(0...2,5 MPa)	0,25 bar	(25 kPa)	100:1	50 bar	(5 MPa)
9	-1...25 bar	(-0,1...2,5 MPa)	0,26 bar	(26 kPa)	100:1	50 bar	(5 MPa)
10	0...7 bar	(0...0,7 MPa)	0,07 bar	(7 kPa)	100:1	14 bar	(1,4 MPa)
11	-1…7 bar	(-100…700 kPa)	0,07 bar	(7 kPa)	114:1	14 bar	(1,4 MPa)
12	-1…1,5 bar	(-100…150 kPa)	0,12 bar	(12 kPa)	20:1	4 bar	(400 kPa)
13	0...2 bar	(0...200 kPa)	100 mbar	(10 kPa)	20:1	4 bar	(400 kPa)
14	0...1 bar	(0...100 kPa)	50 mbar	(5 kPa)	20:1	2 bar	(200 kPa)
15	-0,5...0,5 bar	(-50...50 kPa)	50 mbar	(5 kPa)	20:1	2 bar	(200 kPa)
16	0...0,25 bar	(0...25 kPa)	25 mbar	(2,5 kPa)	10:1	1 bar	(100 kPa)
17	-100...100 mbar	(-10...10 kPa)	20 mbar	(2 kPa)	10:1	1 bar	(100 kPa)
18	-15...70 mbar *	(-1,5...7 kPa)	5 mbar	(0,5 kPa)	17:1	0,5 bar	(50 kPa)
19	0...1,3 bar abs	(0...130 kPa abs)	100 mbar abs	(10 kPa abs)	13:1	2 bar	(200 kPa)
20	0...7 bar abs	(0...0,7 MPa abs)	100 mbar abs	(10 kPa abs)	70:1	14 bar	(1,4 MPa)
21	0...25 bar abs	(0...2,5 MPa abs)	0,25 bar abs	(25 kPa abs)	100:1	50 bar	(5 MPa)
22	0...70 bar abs	(0...7 MPa abs)	0,7 bar abs	(70 kPa abs)	100:1	140 bar	(14 MPa)
23	0...300 bar abs	(0...30 MPa abs)	3 bar abs	(300 kPa abs)	100:1	450 bar	(45 MPa)

* *only for tranmitters without diaphragm seal*

Technical data

Metrological parameters

Accuracy ≤ ±0,1% of calibrated range

Long-term stability (for the basic range) ≤ accuracy for 3 years

Thermal error < ±0,08% (FSO) / 10°C (0,1% for ranges no. 17, 18)
max. ±0,25% (FSO) in the whole compensation range (0,4% for ranges 17, 18)

Thermal compensation range -25...80°C

Additional electronic damping 0...30 s

Error due to supply voltage changes 0.002% (FSO) / V

Electrical parameters

Power supply 7,5...30 V DC

Output signal 4...20 mA, two wire transmission

Load resistance $R[\Omega] \le \frac{U_{sup}[V] - 7{,}5V}{0{,}0225A}$

Resistance required for communication min. 240Ω

Materials

Wetted parts and diaphragms: 316Lss, Hastelloy C 276

Casing: 304ss

Optional: 316ss

Operating conditions

Operating temperature range (ambient temp.)

FL electrical connection -40...80°C*

SGM electrical connection -40...65°C*

** more information available in user's manual and certificate*

Medium temperature range -40...120°C

over 120°C – measurement with use an impulse line or diaphragm seals

CAUTION: the medium must not be allowed to freeze in the impulse line or close to the process connection of the transmitter

Ordering procedure

Model	Code	Description	
PCE-28.SMART/Exd		Smart pressure transmitter Ex II 2G Ex db IIC T6/T5/T4 Gb II 2D Ex tb IIIC T85°C/T100°C/T120°C Db I M2 Ex db I Mb (only for PZ2 casing) IECEx Ex db IIC T6/T5/T4 Gb Ex tb IIIC T85°C/T100°C/T120°C D Ex db I Mb (only for PZ2 casing)	
Versions, certificates	/MR..... /NACE.....	Marine certificate – DNV, BV NACE MR-01-75 certificate	
Nominal measuring range		Range	Min. set range
	/0÷1380 bar.....	0÷1380 bar (0÷138 MPa)	13,8 bar (1,38 MPa)
	/0÷1000 bar.....	0÷1000 bar (0÷100 MPa)	10 bar (1 MPa)
	/0÷600 bar.....	0÷600 bar (0÷60 MPa)	6 bar (600 kPa)
	/0÷300 bar.....	0÷300 bar (0÷30 MPa)	3 bar (300 kPa)
	/0÷160 bar.....	0÷160 bar (0÷16 MPa)	1,6 bar (160 kPa)
	/0÷70 bar.....	0÷70 bar (0÷7 MPa)	0,7 bar (70 kPa)
	/-1÷70 bar.....	-1÷70 bar (-0,1÷7 MPa)	0,71 bar (71 kPa)
	/0÷25 bar.....	0÷25 bar (0÷2,5 MPa)	0,25 bar (25 kPa)
	/-1÷25 bar.....	-1÷25 bar (-0,1÷2,5 MPa)	0,26 bar (26 kPa)
	/0÷7 bar.....	0÷7 bar (0÷700 kPa)	0,07 bar (7 kPa)
	/-1÷7 bar.....	-1÷7 bar (-100÷700 kPa)	0,07 bar (7 kPa)
	/-1÷1,5 bar.....	-1÷1,5 bar (-100÷150 kPa)	120 mbar (12 kPa)
	/0÷2 bar.....	0÷2 bar (0÷200 kPa)	100 mbar (10 kPa)
	/0÷1 bar.....	0÷1 bar (0÷100 kPa)	50 mbar (5 kPa)
	/-0,5÷0,5 bar.....	-0,5÷0,5 bar (-50÷50k Pa)	50 mbar (5 kPa)
	/0÷0,25 bar.....	0÷0,25 bar (0÷25 kPa)	25 mbar (2,5 kPa)
	/-100÷100 mbar.....	-100÷100 mbar (-10÷10 kPa)	20 mbar (2 kPa)
	/-15÷70 mbar.....	-15÷70 mbar (-1,5÷7 kPa)	5 mbar (0,5 kPa)
	/0÷1,3 bar ABS.....	0÷1,3 bar ABS (0÷130 kPa ABS)	0,1 bar ABS (10 kPa ABS)
	/0÷7 bar ABS.....	0÷7 bar ABS (0÷700 kPa ABS)	0,1 bar ABS (10 kPa ABS)
	/0÷25 bar ABS.....	0÷25 ABS (0÷2,5 MPa ABS)	0,25 bar ABS (25 kPa ABS)
	/0÷70 bar ABS.....	0÷70 bar ABS (0÷7 MPa ABS)	0,7 bar ABS (70 kPa ABS)
	/0÷300 bar ABS.....	0÷300 bar ABS (0÷30 MPa ABS)	0,3 bar ABS (30 kPa ABS)
Measuring set range	/…÷… [required units]	Calibrated range in relation to 4mA and 20mA output	
Casing, electrical connection	/SGM (1/2"NPTM).....	316LSS housing, cable electrical connection (3 m of cable in standard)	
	/FL (1/2"NPTM).....	316LSS housing, flying leads (2 m of flying leads in standard)	
	/PZ2.....	304SS housing, IP66, electrical connection M20x1,5F	
Process connection	/G1/2.....	Thread G1/2'' (male) with ∅4 hole, wetted parts SS316L Pressure limits: max. 1000bar	
	/GP.....	Thread G1/2'' (male) with ∅12 hole, wetted parts SS316L Pressure limits: min. 0,25bar / max. 350bar	
	/GP(Hastelloy).....	Thread G1/2'' (male) with ∅12 hole, wetted parts Hastelloy C 276 Pressure limits: min. 0,25bar / max. 350bar	
	/1/2"NPTM.....	Thread 1/2''NPT Male, wetted parts SS316L Pressure limits: max. 690bar	
	/1/2"NPTF.....	Thread 1/2''NPT Female, wetted parts SS316L Pressure limits: min. 10bar / max. 690bar	
	/1/4"NPTF.....	Thread 1/4''NPT Female, wetted parts SS316L Pressure limits: min. 10bar / max. 690bar	
	/Autoclave.....	Compatible with Autovalve type F-250-C Pressure limits: min. 400bar / max. 1380bar	
Accessories	/MT.....	Stainless Steel Tag plate mounted on wire	
Other specification	/.....	Description of required parameters	

PRESSURE TRANSMITTER PCE-28.MODBUS

- ✓ **Digital communication protocol Modbus RTU**
- ✓ **Intrinsic safety certificates (ATEX, IECEx)**
- ✓ **Explosion proof certificates (ATEX, IECEx)**
- ✓ **Accuracy 0.1%**

PM12 type
IP65

PM12(IP67) type
IP67

PKD type
IP67

SG type
IP68

SGM (1/2"NPTM)
IP68
(IP66 for gauge pressure <80bar)

PZ2
IP66

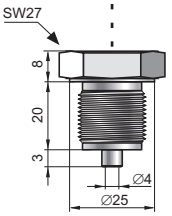

G1/2 type
G1/2″, Ø4 hole
M type
M20×1.5, Ø4 hole

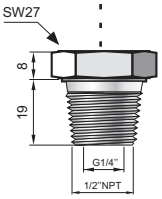

1/2"NPT type
1/2"NPT male +
internal thread G1/4"

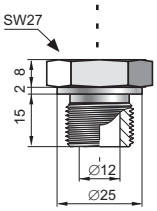

GP type
G1/2″, Ø12 hole
P type
M20×1.5, Ø12 hole

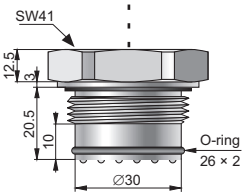

CG1 type
G1″ with flush
diaphragm

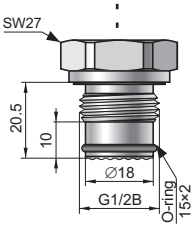

CG1/2 type
G1/2″ with
flush diaphragm

for P≤350bar

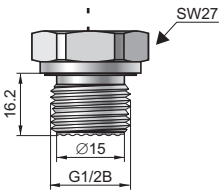

CG1/2B type
G1/2″ with
flush diaphragm

for P>350bar

Application

The transmitters PCE-28.Modbus have two operating modes, configuration mode and Modbus mode. The configuration mode is used for changing settings and detailed diagnostics of the transmitter. In this mode you can also activate a current loop compatible with a 4-20 mA current output.

Installation

The transmitter is not heavy, so it can be installed on the installation without additional mounting bracket. When the pressure of steam or other hot media is measured, a siphon or impulse line should be used. The needle valve placed upstream the transmitter simplifies installation process and enables the zero point adjustment or the transmitter replacement. The transmitter's electrical connections should be performed with twisted cable. The place for the communicator should be assigned before the communicator installation.

Measuring ranges

No.	Nominal measuring range (FSO)		Overpressure limit (without hysteresis)***	
1	0…1000 bar	(0…100 MPa)	1200 bar	(120 MPa)
2	0…600 bar	(0…60 MPa)	1000 bar	(100 MPa)
3	0…300 bar	(0…30 MPa)	450 bar	(45 MPa)
4	0…160 bar	(0…16 MPa)	450 bar	(45 MPa)
5	0...70 bar	(0...7 MPa)	140 bar	(14 MPa)
6	-1...70 bar	(-0,1...7 MPa)	140 bar	(14 MPa)
7	0...25 bar	(0...2,5 MPa)	50 bar	(5 MPa)
8	-1...25 bar	(-0,1...2,5 MPa)	50 bar	(5 MPa)
9	0...7 bar	(0...0,7 MPa)	14 bar	(1,4 MPa)
10	-1…7 bar	(-100…700 kPa)	14 bar	(1,4 MPa)
11	-1…1,5 bar	(-100…150 kPa)	4 bar	(400 kPa)
12	0...2 bar	(0...200 kPa)	4 bar	(400 kPa)
13	0...1 bar	(0...100 kPa)	2 bar	(200 kPa)
14	-0,5...0,5 bar	(-50...50 kPa)	2 bar	(200 kPa)
15	0...0,25 bar	(0...25 kPa)	1 bar	(100 kPa)
16	-100...100 mbar	(-10...10 kPa)	1 bar	(100 kPa)
17	-15...70 mbar	(-1,5...7 kPa)	0,5 bar	(50 kPa)
18	0...1,3 bar abs	(0...130 kPa abs)	2 bar	(200 kPa)
19	0...7 bar abs	(0...0,7 MPa abs)	14 bar	(1,4 MPa)
20	0...25 bar abs	(0...2,5 MPa abs)	50 bar	(5 MPa)
21	0...70 bar abs	(0...7 MPa abs)	140 bar	(14 MPa)
22	0...300 bar abs	(0...30 MPa abs)	450 bar	(45 MPa)

Technical data

Metrological parameters

Accuracy ≤ ±0,1% of calibrated range

Long-term stability (for the basic range) ≤ accuracy for 3 years

Thermal error < ±0,08% (FSO) / 10°C (0,1% for ranges no. 16, 17)
max. ±0,25% (FSO) in the whole compensation range (0,4% for ranges 16, 17)

Thermal compensation range -25...80°C

Additional electronic damping 0...30 s

Error due to supply voltage changes 0.002% (FSO) / V

Materials

Wetted parts and diaphragms: 316Lss

Casing: 304ss (optional: 316ss)

Electrical parameters

Power supply 4…28 V DC
Exia version: 4…10 V DC
in 4…20mA mode (only non Exia version): 5..28 V DC

Transmission range 1200 m

Output MODBUS RTU or 4…20 mA

Address space 1…247 devices address

Transmission speed 1200, 2400, 4800, 9600, 19200, 28800, 38400, 57600, 115200 bps

Parity transmission no parity, odd, even

Frame transmission 10…11bits (1, 2 bit-stop)

** more information about electrical parameters available in user's manual*

Ordering procedure

Model	Code	Description
PCE-28.Modbus		Smart pressure transmitter
Versions, certificates more than one option is available	/Exia	II 1/2G Ex ia IIC T4/T5/T6 Ga/Gb IECEx Ex ia IIC T4/T5/T6 Ga/Gb } for PM12, PKD el. connection
		II 1/2G Ex ia IIC T4/T5/T6 Ga/Gb II 2D Ex ia IIIC T110°C Db I M1 Ex ia I Ma Ex ia IIC T4/T5/T6 Ga/Gb IECEx Ex ia IIIC T110°C Db Ex ia I Ma } for SG el. connection
	/Exd	II 2G Ex db IIC T6/T5/T4 Gb II 2D Ex tb IIIC T85°C/T100°C/T120°C Db IECEx Ex db IIC T6/T5/T4 Gb Ex tb IIIC T85°C/T100°C/T120°C D } for SGM and PZ2 el. connection
	/MR	Marine certificate – DNV, BV
	/Tlen	For oxygen service (sensor filled with Fluorolube fluid), only G1/2" connection
Nominal measuring range		Range
	/0÷1000 bar	0÷1000 bar (0÷100 MPa)
	/0÷600 bar	0÷600 bar (0÷60 MPa)
	/0÷300 bar	0÷300 bar (0÷30 MPa)
	/0÷160 bar	0÷160 bar (0÷16 MPa)
	/0÷70 bar	0÷70 bar (0÷7 MPa)
	/-1÷70 bar	-1÷70 bar (-0,1÷7 MPa)
	/0÷25 bar	0÷25 bar (0÷2,5 MPa)
	/-1÷25 bar	-1÷25 bar (-0,1÷2,5 MPa)
	/0÷7 bar	0÷7 bar (0÷700 kPa)
	/-1÷7 bar	-1÷7 bar (-100÷700 kPa)
	/-1÷1,5 bar	-1÷1,5 bar (-100÷150 kPa)
	/0÷2 bar	0÷2 bar (0÷200 kPa)
	/0÷1 bar	0÷1 bar (0÷100 kPa)
	/-0,5÷0,5 bar	-0,5÷0,5 bar (-50÷50k Pa)
	/0÷0,25 bar	0÷0,25 bar (0÷25 kPa)
	/-100÷100 mbar	-100÷100 mbar (-10÷10 kPa)
	/-15÷70 mbar	-15÷70 mbar (-1,5÷7 kPa)
	/0÷1,3 bar ABS	0÷1,3 bar ABS (0÷130 kPa ABS)
	/0÷7 bar ABS	0÷7 bar ABS (0÷700 kPa ABS)
	/0÷25 bar ABS	0÷25 ABS (0÷2,5 MPa ABS)
	/0÷70 bar ABS	0÷70 bar ABS (0÷7 MPa ABS)
	/0÷300 bar ABS	0÷300 bar ABS (0÷30 MPa ABS)
Electrical connection	/PM12	304SS housing, IP65 with thread M12x1 (without cable)
	/PM12 (IP67)	304SS housing, IP67 with thread M12x1 and connector with cable (3 m in standard)
	/PKD	304SS housing, IP67, cable electrical connection (3 m in standard)
	/SG	316LSS housing, IP68, cable electrical connection (3 m in standard)
	/SGM	316LSS housing, IP68 or IP66, cable electrical connection (3 m in standard)
	/PZ2	304SS housing, IP66, electrical connection M20x1,5F (only for Exd version)
Process connections	/M	Thread M20x1,5 (male) with ∅4 hole, wetted parts SS316L
	/G1/2	Thread G1/2'' (male) with ∅4 hole, wetted parts SS316L
	/P	Thread M20x1,5 (male) with ∅12 hole, wetted parts SS316L } Not available with range no. 1, 2
	/GP	Thread G1/2'' (male) with ∅12 hole, wetted parts SS316L } Not available with range no. 1, 2
	/CG1"	Thread G1'' with flush diaphragm, wetted parts SS316L (Pressure limits: min. 0,1bar / max. 70bar)
	/CG1/2"	Thread G1/2'' with flush diaphragm, wetted parts SS316L (Pressure limits: min. 2,5bar / max. 350bar)
	/CG1/2"B	Thread G1/2'' with flush diaphragm, wetted parts SS316L (Pressure limits: min. 350bar)
	/1/2"NPTM	Thread 1/2''NPT Male, G1/4" Female, wetted parts SS316L (Pressure limits: 1/2"NPT Male max. 690bar, G1/4" Female max. 1000bar)
Accessories	/MT	Stainless Steel Tag plate mounted on wire
Other specification	/	Description of required parameters

PRESSURE TRANSMITTER PCE-28

- ✓ **Any range from 0...25 mbar up to 0...1000 bar**
- ✓ **4 ÷ 20 mA two-wire or 0 ÷ 10 V output**
- ✓ **Intrinsic safety certificate (ATEX, IECEx)**
- ✓ **Marine certificate – DNV, BV**
- ✓ **Gold plated diaphragm**
- ✓ **SIL 1 certificate**
- ✓ **Version with local display**

PD type
PD316 type
IP65

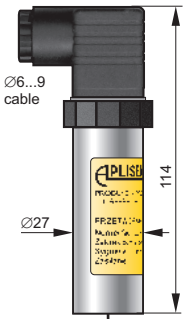

PZ type
PZ316 type
IP66

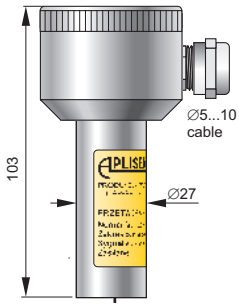

PM12 type
IP65

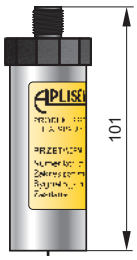

PM12 (IP67) type
IP67

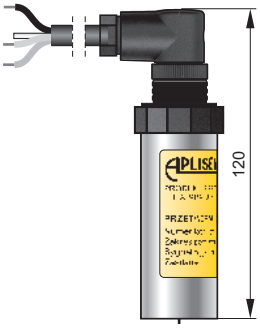

PKD type
IP67

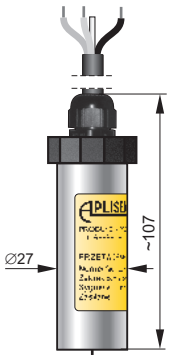

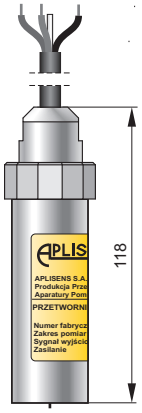

PK type
IP67

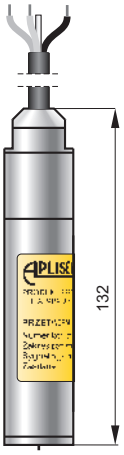

SG type
IP68

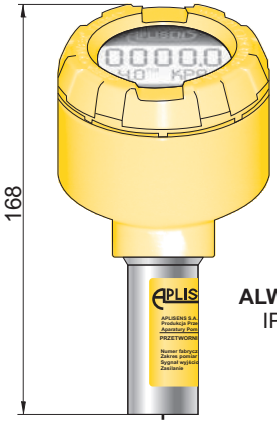

ALW type
IP65

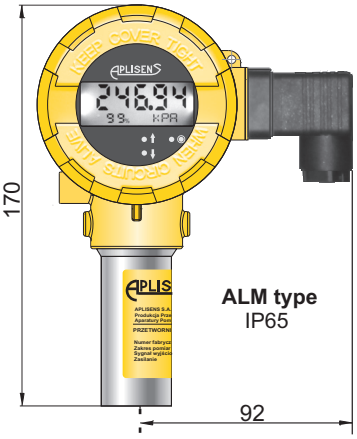

ALM type
IP65

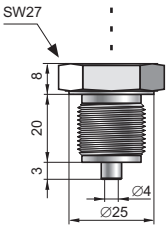

G1/2 type
G1/2″, Ø4 hole
M type
M20×1.5, Ø4 hole

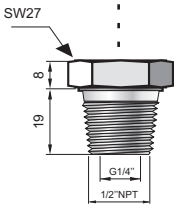

1/2"NPT type
1/2"NPT male +
internal thread G1/4"

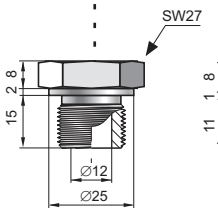

GP type
G1/2″, Ø12 hole
P type
M20×1.5, Ø12 hole

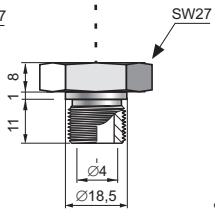

G1/4" type

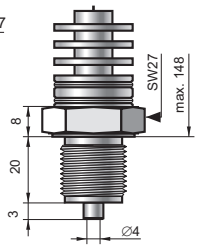

RG type
G1/2″ with radiator

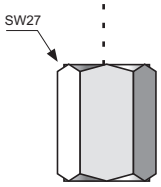

1/2"NPT F type
internal thread
1/2-14NPT

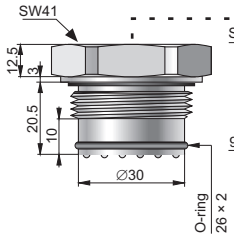

CG1 type
G1″ with flush
diaphragm

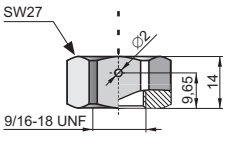

Autoclave
type F-250-C
(9/16-18 UNF)

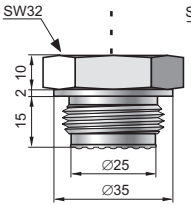

CM30×2 type
M30×2 with flush
Diaphragm

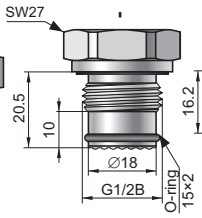

CG1/2 type
G1/2″ with
flush diaphragm
for P≤350bar

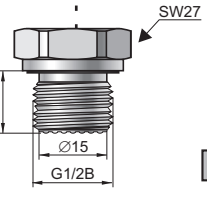

CG1/2B type
G1/2″ with
flush diaphragm
for P>350bar

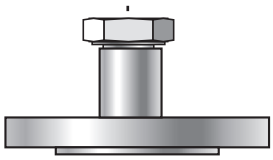

Version with direct
or remotediaphragm sea.
Diaphragm seal data -
see chapter III

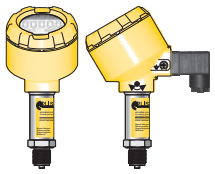

ALW type

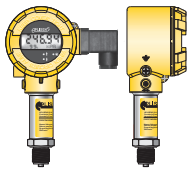

ALM type

ALW and ALM type

Aluminum casing with programable local display. The design of the casing enables the use of a local display, rotation of the display, rotation of the casing by 0–345° relative to the sensor. Electrical connection DIN EN 175301-803, IP65 (special verison with cable electrical connection and IP67).

Display with backlight allows to read:
- measured pressure in user units or % of measuring range
- current in output loop in mA

Application and construction

The PCE-28 pressure transmitter is applicable to the measurement of the pressure, underpressure and absolute pressure of gases, vapours and liquids. The active sensing element is a piezoresistant silicon sensor separated from the medium by a diaphragm and by specially selected type of manometric liquid. The electronics is placed in a casing with a degree of protection from IP 65 to IP 68, depending on the type of electrical connection applied.

Calibration

Potentiometers can be used to shift the zero position and the range by up to ±10%, without altering the settings (not possible with ALM and SG casing).

Installation

The transmitter is not heavy, so it can be installed directly on the installation. When the pressure of steam or other hot media is measured, a siphon or impulse line should be used. The needle valve placed upstream the transmitter simplifies installation process and enables the zero point adjustment or the transmitter replacement.
When the special process connections are required for the measurement of levels and pressures (e.g. at food and chemical industries), the transmitter is provided with an Aplisens diaphragm seal. Installing accessories and a full scope of diaphragm seals are described in detail in the further part of the catalogue.

Measurements under explosion hazard

ATEX Intrinsic safety version is available for taking measurements in zones under explosion hazard. The installation of the transmitter in a zone under explosion hazard requires the use of a Ex power supply. We recommend the use of the Aplisens ZS-30/1Ex power supply and separator.

Technical data

Any measuring range 0...25 mbar ÷ 0...1000 bar (over pressure, under pressure); 400 mbar ÷ 80 bar (absolute pressure)
Measurement of lower pressure ranges, possible using transmitter PRE-50G with GP process connection.

		Measuring range			
	25 mbar	100 mbar	400 mbar	0…1 bar ÷ 160bar	0…160 bar ÷ 1000bar
Overpressure Limit (repeated, without hysteresis)	1 bar	1 bar	2,5 bar	4 x range	2 x range; max. 1200 bar
Damaging Overpressure	2 bar	2 bar	5 bar	8 x range; max. 2000 bar	
Accuracy	0,6%	0,3%	0,2% (0,16% - special version) 0,1% / year		
Long term stability	0,6% / year	0,2% / year			
Thermal error	Typically 0,5% / 10°C Max 0,6% / 10°C	Typically 0,3% / 10°C Max 0,4% / 10°C		Typically 0,2% / 10°C Max 0,3% / 10°C	

Hysteresis, repeatability 0,05%
Response time < 120 ms
version TR: < 30 ms
Thermal compensation range -10...80°C
Operating temperature range (ambient temp.) -40...80°C
Medium temperature range -40...130°C

over 130°C – measurement with use an impulse line or diaphragm seals

CAUTION: the medium must not be allowed to freeze in the impulse line or close to the process connection of the transmitter

Output signal 4...20 mA, two wire transmission
0..10V
Material of wetted parts 316Lss, Hastelloy C 276, Au
Material of casing 304ss, 316Lss
Power supply
output 4..20mA
8…36 V DC (Ex 9...28 V DC)
version TR, version Safety: 10,5…36 V DC (Ex 12...28 V DC)
ALW and ALM version: (11…36V DC)
output 0..10V
13…30 VDC
Error due to supply voltage changes 0,005%/ V
Load resistance $R[\Omega] \le \frac{U_{sup}[V] - 8V}{0{,}02A}$

Ordering procedure

Model	Code	Description
PCE-28		Pressure transmitter
Versions, certificates	/Exia	Ex: II 1/2G Ex ia IIC T4/T5/T6 Ga/Gb; II 1D Ex ia IIIC T110°C Da; I M1 Ex ia I Ma IECEx: Ex ia IIC T4/T5/T6 Ga/Gb; Ex ia IIIC T110°C Da; Ex ia I Ma Only for transmitters with 4…20mA output For PM12, PKD version: Ex: II 1/2G Ex ia IIC T4/T5/T6 Ga/Gb IECEx: Ex ia IIC T4/T5/T6 Ga/Gb For ALW, ALM version: Ex: II 1/2G Ex ia IIC T4 Ga/Gb; II 1D Ex ia IIIC T110°C Da IECEx: Ex ia IIC T4 Ga/Gb; Ex ia IIIC T110°C Da
	/MR	Marine certificate – DNV, BV (not available in ALW, ALM version)
	/Tlen	For oxygen service (sensor filled with Fluorolube fluid), only G1/2" connection
	/H	version with high overload capacity and integrated circuit offering excess voltage protection
	/PED	PED, category I
	/0,16%	Accuracy <0,16% (available for ranges >400mbar)
more than one option is available	/Safety	SIL 1 certificate; only 4…20mA output
	/TR	Response time <30ms; only 4…20mA output, only PD, PZ, PM12, PK version.
	/NACE	NACE MR-01-75 certificate (process connections: M, G1/2", P, GP and 1/2"NPTM)
Measuring range	/…÷… [required units]	Measuring range
Analogue output signal	*(without marking)*	4...20mA / power supply 8...36VDC (Ex 9…28VDC)
	/0÷10V	0...10VDC /power supply 13...30VDC
Casing, electrical connection	/PD	304SS housing, IP65, DIN EN 175301-803 connector
	/PD316	316SS housing, IP65, DIN EN 175301-803 connector
	/PZ	304SS housing, IP66, packing gland M20x1,5
	/PZ316	316SS housing, IP66, packing gland M20x1,5
	/PM12	304SS housing, IP65 with thread M12x1
	/PM12 (IP67)	304SS housing, IP67 with thread M12x1 and connector with cable (3 m in standard)
	/PK	304SS housing, IP67, cable electrical connection (3 m of cable in standard)
	/PK (ETFE)	304SS housing, IP67, cable electrical connection (3 m of ETFE cable in standard)
	/PKD	304SS housing, IP67, cable electrical connection (3 m of cable in standard)
	/SG	316LSS housing, IP68, cable electrical connection (3 m of cable in standard)
	/SGM	316LSS housing, IP68, cable electrical connection (3 m of cable in standard)
	/ALW *	Aluminum housing, local display, IP65, DIN43650 connector (4…20mA version only)
	/ALM *	Aluminum housing, local display, IP65, DIN43650 connector (4…20mA version only)
Process connections	/M	Thread M20x1,5 (male) with ∅4 hole, wetted parts SS316L
	/G1/2	Thread G1/2'' (male) with ∅4 hole, wetted parts SS316L
	/G1/2(Au)	Thread G1/2'' (male) with ∅4 hole, gold plated diaphragm (Pressure limits: min. 10bar / max. 1000bar)
	/G1/4	Thread G1/4'' (male), wetted parts SS316L (Pressure limits: max. 400bar)
	/P	Thread M20x1,5 (male) with ∅12 hole, wetted parts SS316L
	/GP	Thread G1/2'' (male) with ∅12 hole, wetted parts SS316L
	/GP(Hastelloy)	Thread G1/2'' (male) with ∅12 hole, wetted parts Hastelloy C 276 Pressure limits: max. 350bar
	/CM30x2	Thread M30x2 with flush diaphragm, wetted parts SS316L (Pressure limits: min. 0,1bar / max. 70bar)
	/CM30x2(Hastelloy)	Thread M30x2 with flush diaphragm, wetted parts Hastelloy C 276 (Pressure limits: min. 0,1bar / max. 70bar)
	/CG1"	Thread G1'' with flush diaphragm, wetted parts SS316L (Pressure limits: min. 0,1bar / max. 70bar)
	/CG1"(Hastelloy)	Thread G1'' with flush diaphragm, wetted parts Hastelloy C 276 (Pressure limits: min. 0,1bar / max. 70bar)
	/CG1/2"	Thread G1/2'' with flush diaphragm, wetted parts SS316L (Pressure limits: min. 2,5bar / max. 350bar)
	/CG1/2"B	Thread G1/2'' with flush diaphragm, wetted parts SS316L (Pressure limits: min. 350bar)
	/RG	Thread G1/2" with radiator, wetted parts SS316L (Pressure limits: min. 160mbar / max. 40bar, max. temperature up to 170°C)
	/1/2"NPTM	Thread 1/2''NPT Male, G1/4" Female, wetted parts SS316L (Pressure limits: ˝ "NPT Male max. 690bar, G1/4" Female max. 1000bar)
	/1/2"NPTF	Thread M20x1,5 with adapter to 1/2"NPT Female, wetted parts SS316L (Pressure limits: max. 690bar)
	/Autoclave	Compatible with Autovalve type F-250-C Pressure limits: min. 400bar / max. 1000bar
	/code of diaphragm seal	Diaphragm seal (see chapter of diaphragm seals)
Accessories	/MT	Stainless Steel Tag plate mounted on wire
Other specification	/	Description of required parameters (e.g. non-standard pr. connection G3/4", M22x1,5)

* - pushbuttons allows to change display settings only, version ALM without Zero and Span potentiometers

EXPLOSION PROOF PRESSURE TRANSMITTER PCE-28/EXD

- ✓ **Any range from 0...25 mbar up to 0...1380 bar**
- ✓ **4 ÷ 20 mA two-wire output**
- ✓ **Explosion proof certificate (ATEX, IECEx)**
- ✓ **Marine certificate – DNV, BV**
- ✓ **SIL 1 certificate**
- ✓ **NACE compatibility**

SGM (1/2"NPTM)
cable connection
IP68
(IP66 for gauge pressure <80bar)

FL (1/2"NPTM)
flying leads
IP68
(IP66 for gauge pressure <80bar)

PZ2
IP66

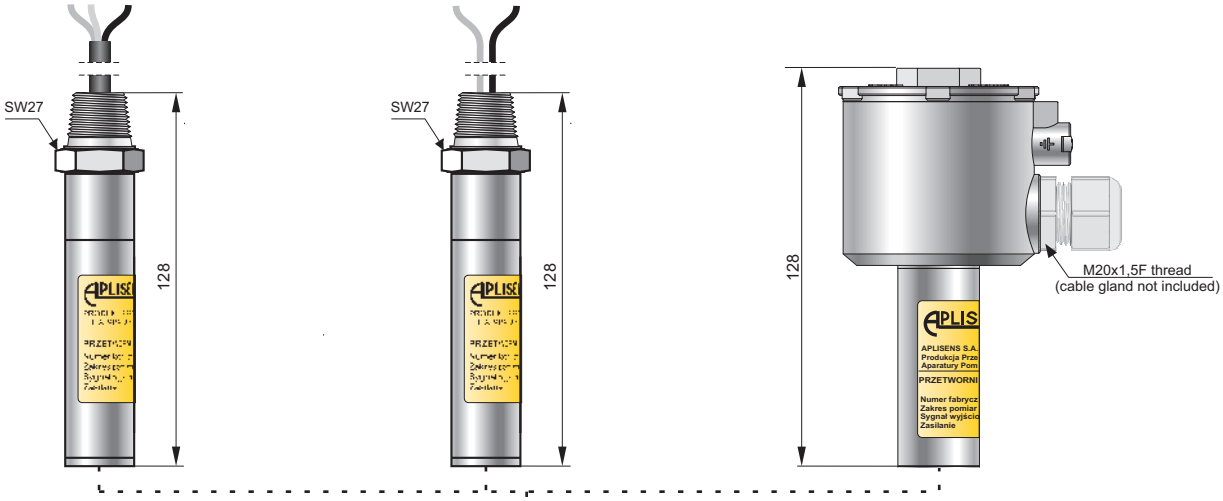

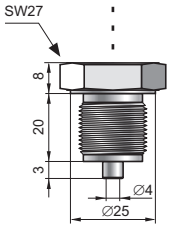

G1/2 type
G1/2″, Ø4 hole

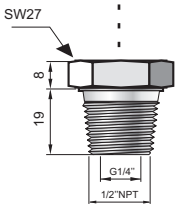

1/2"NPT type
1/2"NPT male +
internal thread G1/4"

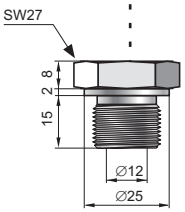

GP type
G1/2″, Ø12 hole

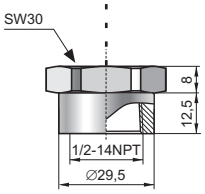

1/2NPTF type
1/2-14 NPT female

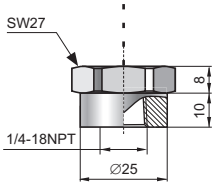

1/4NPTF type
1/4-18 NPT female

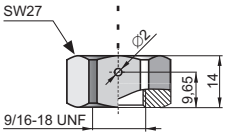

Autoclave
type F-250-C
(9/16-18 UNF)

Application and construction

The PCE-28 pressure transmitter is applicable to the measurement of the pressure, underpressure and absolute pressure of gases, vapours and liquids.The active sensing element is a piezoresistant silicon sensor separated from the medium by a diaphragm and by specially selected type of manometric liquid.The electronics is placed in a casing with a degree of protection from IP 66 to IP 68.

Measurements under explosion hazard

ATEX Explosion Proof version is available for taking measurements in zones under explosion hazard.

Technical data

Any measuring range 0...25 mbar ÷ 0...1380 bar (over pressure, under pressure); 400 mbar ÷ 80 bar (absolute pressure)

		Measuring range			
	25 mbar	100 mbar	400 mbar	0…1 bar ÷ 160bar	0…160 bar ÷ 1380bar
Overpressure Limit (repeated, without hysteresis)	1 bar	1 bar	2,5 bar	4 x range	2 x range; max. 1600 bar
Damaging Overpressure	2 bar	2 bar	5 bar	8 x range; max. 2000 bar	
Accuracy	0,6%	0,3%	0,2% (0,16% - special version) 0,1% / year		
Long term stability	0,6% / year	0,2% / year			
Thermal error	Typically 0,5% / 10°C Max 0,6% / 10°C	Typically 0,3% / 10°C Max 0,4% / 10°C		Typically 0,2% / 10°C Max 0,3% / 10°C	

Hysteresis, repeatability 0,05%
Response time < 120 ms
Thermal compensation range -10...80°C
Operating temperature range (ambient temp.)
FL electrical connection -40...80°C*
SGM electrical connection -40...65°C*
** more information available in user's manual and certificate*
Medium temperature range -40...130°C

over 130°C – measurement with use an impulse line

CAUTION: the medium must not be allowed to freeze in the impulse line or close to the process connection of the transmitter

Output signal 4...20 mA, two wire transmission
Material of wetted parts 316Lss, Hastelloy C 276
Material of casing 304ss, 316Lss
Power supply 8…30 V DC
Version Safety: 10,5…36 V DC
Error due to supply voltage changes 0,005%/ V
Load resistance $R[\Omega] \le \frac{U_{sup}[V] - 8V}{0{,}02A}$

Ordering procedure

Model	Code	Description
PCE-28/Exd	/Exd……....	Pressure transmitter Ex: II 2G Ex db IIC T6/T5/T4 Gb II 2D Ex tb IIIC T85°C/T100°C/T120°C Db I M2 Ex db I Mb (only for PZ2 casing) IECEx: Ex db IIC T6/T5/T4 Gb Ex tb IIIC T85°C/T100°C/T120°C Db Ex db I Mb (only for PZ2 casing)
Versions, certificates more than one option is available	/MR..... /0,16%..... /SIL 1..... /NACE.....	Marine certificate – DNV, BV Accuracy <0,16% (available for ranges >400mbar) SIL 1 certificate; only 4...20mA output NACE MR-01-75 certificate
Measuring range	/…÷… [required units]	Measuring range
Casing, electrical connection	/SGM (1/2"NPTM)..... /FL (1/2"NPTM)..... /PZ2.....	316LSS housing, cable electrical connection (3 m of cable in standard) 316LSS housing, flying leads (2 m of flying leads in standard) 304SS housing, IP66, electrical connection M20x1,5F
Process connection	/G1/2..... /GP..... /GP(Hastelloy)..... /1/2"NPTM..... /1/2"NPTF..... /1/4"NPTF..... /Autoclave.....	Thread G1/2'' (male) with ∅4 hole, wetted parts SS316L Pressure limits: max. 1000bar Thread G1/2'' (male) with ∅12 hole, wetted parts SS316L Pressure limits: min. 0,25bar / max. 350bar Thread G1/2'' (male) with ∅12 hole, wetted parts Hastelloy C 276 Pressure limits: min. 0,25bar / max. 350bar Thread 1/2''NPT Male, wetted parts SS316L Pressure limits: max. 690bar Thread 1/2''NPT Female, wetted parts SS316L Pressure limits: min. 10bar / max. 690bar Thread 1/4''NPT Female, wetted parts SS316L Pressure limits: min. 10bar / max. 690bar Compatible with Autovalve type F-250-C Pressure limits: min. 400bar / max. 1380bar
Accessories	/MT.....	Stainless Steel Tag plate mounted on wire
Other specification	/.....	Description of required parameters

LOW VOLTAGE PRESSURE TRANSMITTERS PC-29A and PC-29B

- ✓ **Any range from 0...25 mbar up to 0...1000 bar**
- ✓ **Intrinsic safety certificate (ATEX, IECEx)**

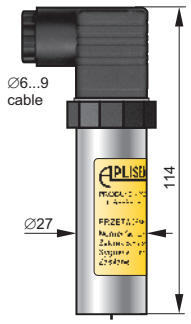

PD type
IP65

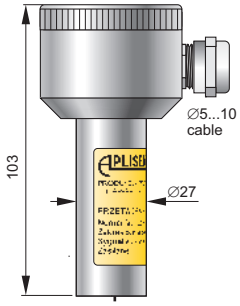

PZ type
IP66

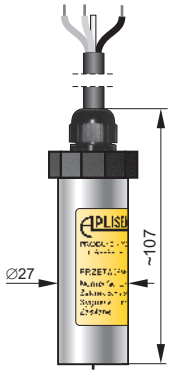

PKD type
IP67

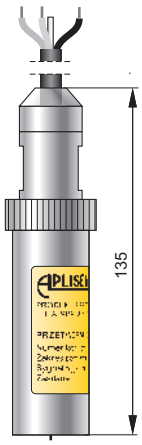

PK type
IP66/67

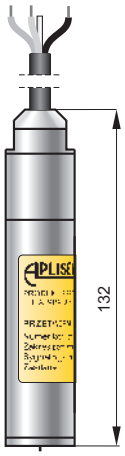

SG type
IP68

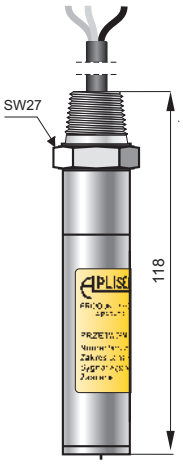

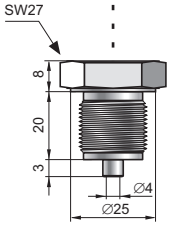

G1/2 type
G1/2″, ∅4 hole
M type
M20×1.5, ∅4 hole

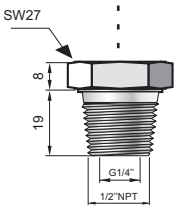

1/2"NPT type
1/2"NPT male +
internal thread G1/4"

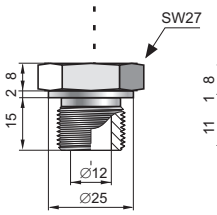

GP type
G1/2″, ∅12 hole
P type
M20×1.5, ∅12 hole

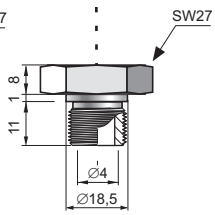

G1/4" type

Application and construction

The PC-29A and PC-29B pressure transmitters are applicable to the measurement of the pressure, underpressure and absolute pressure of gases, vapours and liquids. The active sensing element is a piezoresistant silicon sensor separated from the medium by a diaphragm and by specially selected type of manometric liquid. The electronics is placed in a casing with a degree of protection from IP 65 to IP 68, depending on the type of electrical connection applied.

Calibration

Potentiometers can be used to shift the zero position and the range by up to ±10%, without altering the settings.

Installation

The transmitter is not heavy, so it can be installed directly on the installation. When the pressure of steam or other hot media is measured, a siphon or impulse line should be used. The needle valve placed upstream the transmitter simplifies installation process and enables the zero point adjustment or the transmitter replacement.

When the special process connections are required for the measurement of levels and pressures (e.g. at food and chemical industries), the transmitter is provided with an Aplisens diaphragm seal. Installing accessories and a full scope of diaphragm seals are described in detail in the further part of the catalogue.

Measurements under explosion hazard

ATEX Intrinsic safety version is available for taking measurements in zones under explosion hazard. The installation of the transmitter in a zone under explosion hazard requires the use of a Ex power supply. We recommend the use of the Aplisens ZS-30/1Ex power supply and separator.

Technical data

Any measuring range 0...25 mbar ÷ 0...1000 bar (over pressure, under pressure); 400 mbar ÷ 80 bar (absolute pressure)

		Measuring range			
	25 mbar	100 mbar	400 mbar	0…1 bar ÷ 160bar	0…160 bar ÷ 1000bar
Overpressure Limit (repeated, without hysteresis)	1 bar	1 bar	2,5 bar	4 x range	2 x range; max. 1200 bar
Damaging Overpressure	2 bar	2 bar	5 bar	8 x range; max. 2000 bar	
Accuracy	0,6%	0,3%	0,2% (0,16% - special version) 0,1% / year		
Long term stability	0,6% / year	0,2% / year			
Thermal error	Typically 0,5% / 10°C Max 0,6% / 10°C	Typically 0,3% / 10°C Max 0,4% / 10°C		Typically 0,2% / 10°C Max 0,3% / 10°C	

Hysteresis, repeatability 0,05%
Response time < 120 ms
Thermal compensation range -10...80°C
Operating temperature range (ambient temp.) -40...80°C
Medium temperature range -40...120°C

over 120°C – measurement with use an impulse

CAUTION: the medium must not be allowed to freeze in the impulse line or close to the process connection of the transmitter

Material of wetted parts 316Lss
Material of casing 304ss, 316Lss

Power supply

Type	Power supply	Output signal
PC-29A	8…14 V DC	0…5 V
	8…14 V DC	0,5…4,5 V
PC-29B	3,3 V DC	0…2,5 V
	4,5 V DC	0…3,3 V

Details about power supply for Exia version available in manual

Error due to supply voltage changes 0,005%/ V
Load resistance R≥20kΩ

Ordering procedure

Model	Code	Description
PC-29A / PC-29B		Pressure transmitter
Versions, certificates	/Exia……....	IECEx: II 1/2G Ex ia IIC T4/T5/T6 Ga/Gb; I M1 Ex ia I Ma; Ex ia IIC T4/T5/T6 Ga/Gb; Ex ia I Ma — for PD, PZ, PK, SG electrical connection IECEx: II 1/2G Ex ia IIC T4/T5/T6 Ga/Gb; Ex ia IIC T4/T5/T6 Ga/Gb — for PKD electrical connection
Measuring range	/…÷… [required units]	Measuring range
Output signal	/…÷… [V]	Output signal
Casing, electrical connection	/PD……	304SS housing, IP65, DIN EN 175301-803 connector
	/PZ……	304SS housing, IP66, packing gland M20x1,5
	/PK……	304SS housing, IP66/67, cable electrical connection
	/PKD……	304SS housing, IP67, cable electrical connection (3 m of cable in standard)
	/SG……	316LSS housing, IP68, cable electrical connection (3 m of cable in standard)
	/SGM……	316LSS housing, IP68, cable electrical connection (3 m of cable in standard)
Process connections	/M….....	Thread M20x1,5 (male) with ∅4 hole, wetted parts SS316L
	/G1/2….....	Thread G1/2'' (male) with ∅4 hole, wetted parts SS316L
	/G1/4….....	Thread G1/4'' (male), wetted parts SS316L (Pressure limits: max. 400bar)
	/P….....	Thread M20x1,5 (male) with ∅12 hole, wetted parts SS316L — Pressure limits: max. 350bar
	/GP….....	Thread G1/2'' (male) with ∅12 hole, wetted parts SS316L — Pressure limits: max. 350bar
	/1/2"NPTM….....	Thread 1/2"NPT Male, G1/4" Female, wetted parts SS316L (Pressure limits: ″ "NPT Male max. 690bar, G1/4" Female max. 1000bar)
Accessories	/MT.....	Stainless Steel Tag plate mounted on wire
Other specification	/.....	Description of required parameters

Pressure Transmitter AS

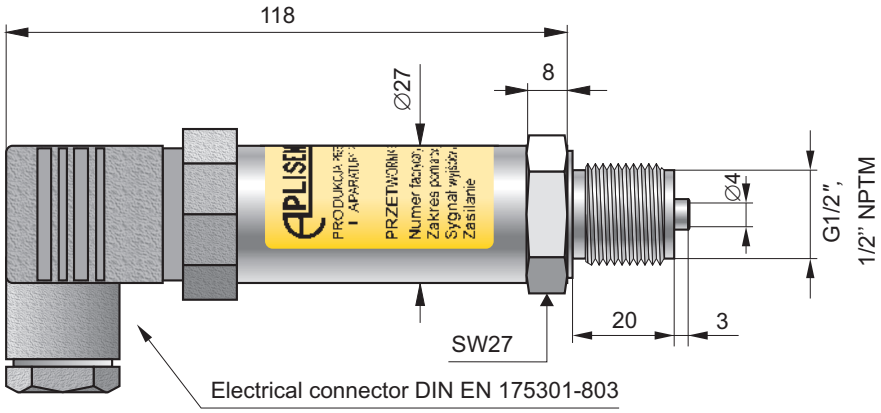

- ✓ **Potentiometers for zero and span adjustment**
- ✓ **Accuracy 0,4%**
- ✓ **Measuring ranges: 0 ÷ 1; 0 ÷ 2,5; 0 ÷ 6 0 ÷ 10; 0 ÷ 16; 0 ÷ 25 bar**
- ✓ **Output signal 4 ÷ 20 mA or 0 ÷ 10 V**
- ✓ **Process connection 1/2"NPTM, G1/2", M20×1,5**

Application

The pressure transmitter AS is applicable to measurement the pressure of gases vapours and liquids. It may be applied in water supply systems and heat engineering.

Construction

The active sensing element is a piezoresistant silicon sensor separated from the medium by a diaphragm and by specially selected type of manometric liquid. The electronics are placed in the casing with a degree of protection IP65. Electrical connection is the connector DIN EN 175301-803.

Installation

The transmitter is not heavy, so it can be fitted on the installation. For pressure measurements of steam or other hot media a siphon or impulse line should be used. The needle valve placed upstream the transmitter simplifies installation process and enables the transmitter replacement.

Metrological parameters

Accuracy	0,4%
Hysteresis, repeatability	0,05%
Overpressure limit	4 × range
Thermal compensation range	0 ÷ 70°C
Thermal error	0,2% / 10°C
Long-term stability	0,5% / year

Technical data

Degree of protection	IP65
Material of wetted parts	00H17N14M2 (SS316L)
Material of casing	0H18N9 (SS304)

Electrical parameters

Output signal	4 ÷ 20 mA, two wire transmission 0 ÷ 10 V, three wire transmission
Power supply	8…36 VDC – two wire transmission 13…30 VDC – three wire transmission
Load resistance (for current output)	$R[\Omega] \le \frac{U_{sup}[V] - 8V}{0{,}02A}$
Load resistance (for supply output)	$R \ge 20k\Omega$

Operating conditions

Operating temperature range (ambient temp.) –25 ÷ 80°C

Medium temperature range:

–25 ÷ 120°C – direct measurement

–25 ÷ 170°C – measurement using an impulse line

Ordering procedure

AS /___/___/___

Measuring range:
0 ÷ 1, 0 ÷ 2.5, 0 ÷ 6, 0 ÷ 10, 0 ÷ 16, 0 ÷ 25 bar

Output signal:
4 ÷ 20 mA or **0 ÷ 10 V**

Process connection
G1/2", 1/2" NPTM

INDUSTRIAL PRESSURE GAUGE MS-100K

- ✓ **Casing diameter ∅100**
- ✓ **Material of casing, process connection and measuring element – stainless steel**
- ✓ **Accuracy 1%**

Application, construction

MS-100 pressure gauges are applicable to the measurement of the pressure of liquids and gases at temperatures up to 200°C. The range of pressures of the measured medium should correspond to 3/4 of the reading range of the pressure meter for constant pressures or 2/3 of the reading range for pulsating pressures. The casing box is made of stainless steel and has a window made of industrial glass. The pressure gauge's measuring element and process connection are made of stainless steel (or brass for version with diaphragm seals).

Technical data

Standard measurement ranges:
0...1, 1.6, 2.5, 4, 6, 10, 16, 25, 40, 60, 100, 160, 250, 400 bar
-1...0, 0.6, 1.5, 5, 9, 15 bar

Accuracy	1%
Diameter of the casing	∅100
Material of the casing	0H18N9 (304ss)
Material of process connection and measuring element	H17N13M2T (316Ti),
Process connection	G1/2″ or M20×1.5
Process connection outlet	bottom (special version: back)

Operating temperature range	
Filling fluid:	
without	-40…90°C
glycerine	-20...65°C
Medium temperature range	
Filling fluid:	
without	up to 200°C
glycerine	up to 90°C
Degree of protection	IP 65

Special versions

glycerine	casing filled with glycerine
T	back connection

Ordering procedure

MS-100K /__÷__/___/___/___

- Measurement range
- Special version: **glycerine, T**
- Type of process connection (**G1/2″**, **M20×1.5**)
- **MC3.1** - Material certificate
- **NACE** - NACE MR-01-75 comply

Example: MS-100K pressure gauge / range 0 ÷ 6 bar / glycerine / G1/2″ process connection

MS-100K / 0 ÷ 6 bar / glycerine / G1/2″

PRESSURE GAUGE WITH DIAPHRAGM SEAL MS-100

- ✓ **Casing diameter ∅100**
- ✓ **Material of casing, process connection and measuring element – stainless steel**
- ✓ **Accuracy 1%**

Use

Burdon tube pressure gauges are mechanical pressure measuring devices, which are sensitive to many factors typical of industrial applications. The use of diaphragm seals will significantly improve the reliability of the pressure gauge, and is often a necessary condition for measurements to be made.

Pressure gauges with appropriate diaphragm seals are used:

to measure the pressure of media which are:
- contaminated, viscous, solidifying,
- at high or low temperature,
- chemically reactive;

in cases of:
- mechanical vibration of the system,
- pulsating pressure;

where there is a need for:
- protection of the system against unsealing in case of a fault with the manometer,
- aseptic measurement conditions in the food and pharmaceuticals industries.

The full range of diaphragm seals which can be used with pressure gauge is described in detail in Chapter III: Diaphragm Seals. The temperature range of the medium measured using a pressure gauge with diaphragm seal depends on the choice of diaphragm seal and may lie between -60 and +315°C.

With an appropriate selection of pressure gauge and diaphragm seal, taking into account the width of the measurement range, the measurement accuracy of the unit is in accordance with the precision class of the pressure gauge. Detailed recommendations concerning the range of usability of diaphragm seals combined with manometers are contained in Chapter III: Diaphragm Seals.

Technical data

Standard measurement ranges:
0...1, 1.6, 2.5, 4, 6, 10, 16, 25, 40, 60, 100, 160, 250, 400 bar
-1...0, 0.6, 1.5, 5, 9, 15 bar

Accuracy	1%
Diameter of the casing	∅100
Material of the casing	0H18N9 (304ss)
Material of process connection and measuring element	H17N13M2T (316Ti),
Process connection	diaphragm seal
Process connection outlet	bottom (special version: back)

Special versions

glycerine	casing filled with glycerine
T	back connection

Ordering procedure

MS-100 /__÷__/___/___/___

MC3.1 - Material certificate
NACE - NACE MR-01-75 comply

Measurement range

Special version: **glycerine, T**

Type of diaphragm seal according to the diaphragm seals data sheets

Example: MS-100 pressure gauge / range 0 ÷ 6 bar / glycerine / DN50PN40 diaphragm seal

MS-100 / 0 ÷ 6 bar / glycerine / S-P-DN50PN40

Chapter II
Devices for measurement of differential pressure or level in pressure tanks

Smart differential pressure transmitter
APR-2000ALW ..... II/ 2

Smart differential pressure transmitter
APRE-2000 ..... II/ 6

Smart differential pressure transmitter
for low ranges APR-2000ALW/G ..... II/ 9

Smart differential pressure transmitter
for low ranges APRE-2000G ..... II/ 12

Smart differential pressure transmitter
PRE-28.SMART ..... II/ 15

Differential pressure transmitter
PRE-28.MODBUS ..... II/ 18

Differential pressure transmitter PRE-28 ..... II/ 21

Differential pressure transmitter AS-dP ..... II/ 23

Differential pressure transmitter
for low ranges PR-50G ..... II/ 24

Smart differential pressure transmitter
with two diaphragm seals
APR-2000ALW ..... II/ 26

Smart, modular differential pressure transmitter
APM-2 ..... II/ 33

SMART DIFFERENTIAL PRESSURE TRANSMITTER APR-2000ALW

- ✓ 4…20 mA output signal + HART 5 / HART 7 protocol (special version: 0…20 mA or 0…5 mA output signal + HART 5 protocol)
- ✓ Display with backlight
- ✓ Safety version SIL2/SIL3
- ✓ Intrinsic safety certificate ATEX, IECEx, FM (USA, Canada)
- ✓ Explosion proof certificate ATEX, IECEx, FM (USA, Canada)
- ✓ Programmable zero range, shift, characteristic and damping ratio with local panel keys
- ✓ Static pressure limit up to 600bar
- ✓ Accuracy 0,075% (0,05%, 0,04% on request)
- ✓ Marine certificate – DNV, BV
- ✓ Gold plated diaphragms
- ✓ Wetted parts material 316L/Hastelloy C276

up to 5 years warranty

static pressure limit up to 600bar

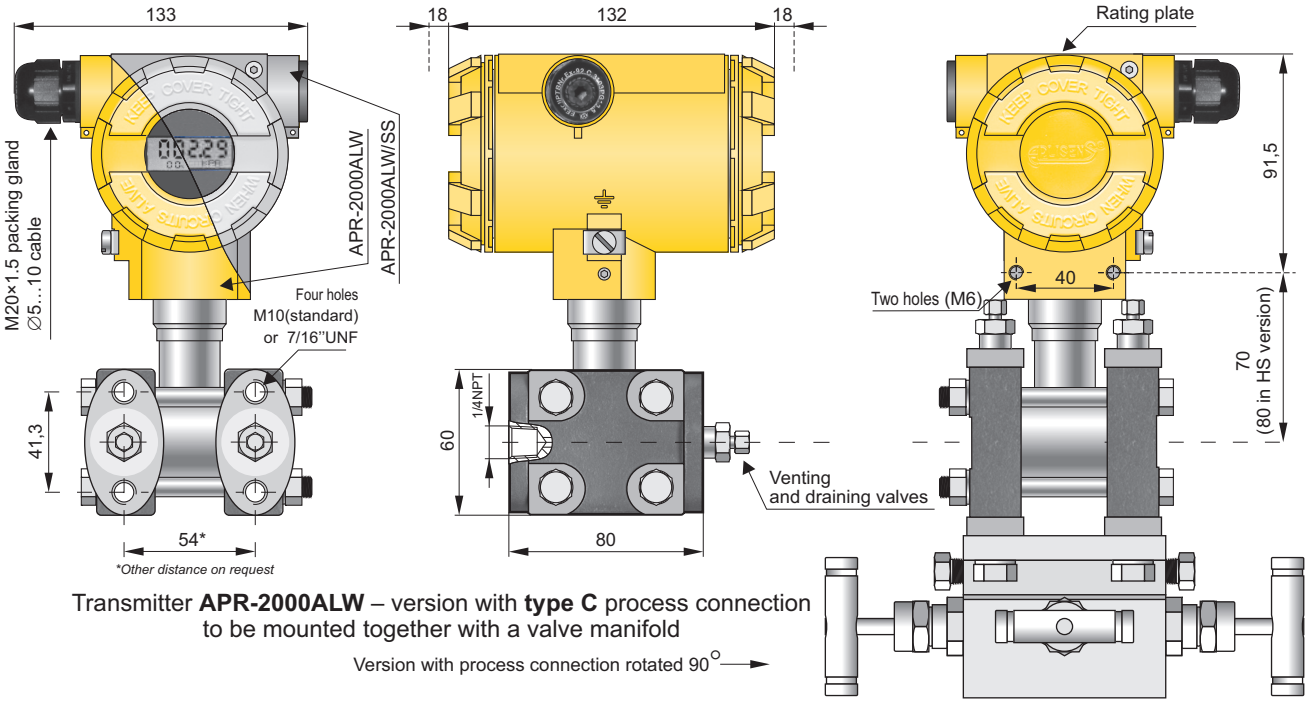

Transmitter **APR-2000ALW** – version with **type C** process connection to be mounted together with a valve manifold

Version with process connection rotated 90°

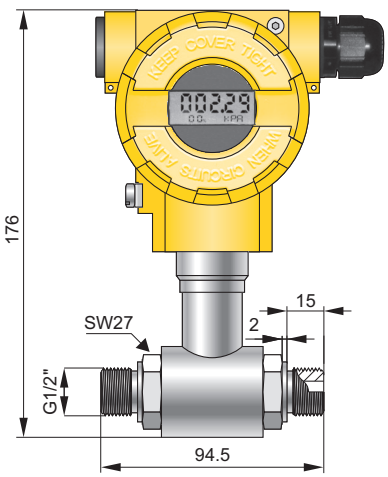

Transmitter **APR-2000ALW**
Version with **GP type** process connection.

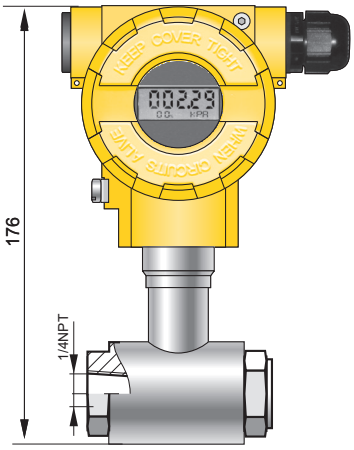

Transmitter **APR-2000ALW**
Version with **PN type** process connection.

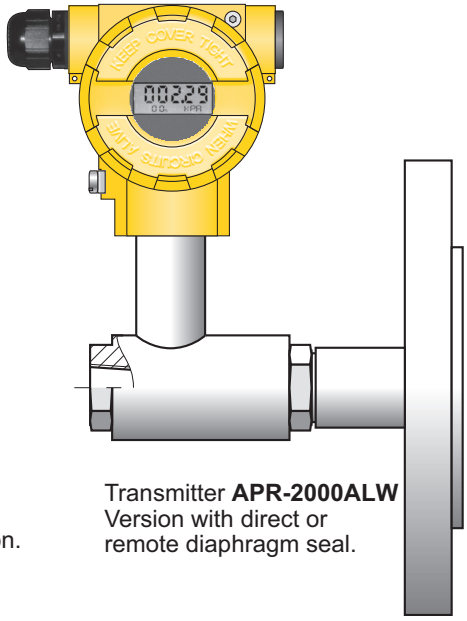

Transmitter **APR-2000ALW**
Version with direct or remote diaphragm seal.

Application and construction

The APR-2000ALW transmitter is applicable to the measurement of differential pressure of gases, vapours and liquids. The active element is a piezoresistant silicon sensor separated from the medium by separating diaphragms and a specially selected type of manometric fluid. The special design of the active sensing element ensures that it is able to withstand pressure surges and overloads of up to 250/320/413/700 bar.The casing is made of aluminium alloy cast or 316SS stainles steel, degree of protection IP66/IP67. The design of the casing enables the use of a local display, rotation of the display, rotation of the casing by 0–340° relative to the sensor, and a choice of cable direction.

Communication and configuration

The communication standard for data interchange with the transmitter is the Hart protocol.

Communication with the transmitter is carried out with:

– a KAP-03, KAP-03Ex communicator
– some other Hart type communicators(*)
– a PC using an HART/USB converter and Raport 2 configuration software.

(*) .eddl files available on www.aplisens.com.

The data interchange with the transmitter enables users to:

- identify the transmitter
- configure the output parameters:
  - measurement units and the values of the start points and end points at the measurement range
  - damping time constant
  - conversion characteristic (inversion, user's non-linear characteristic)
- read the currently measured pressure value of the output current and the percentage output control level
- force an output current with a set value
- calibrate the transmitter in relation to a model pressure

Installation

The transmitter with **P** or **PN type** process connection is not heavy, so can be installed without additional mounting bracket on application. For fitting in any desired position we recommend an universal Aplisens mounting bracket for 2″ pipe (AL mounting bracket, see page IV/ 5). The version with **C type** process connections can be fitted directly to a 3- or 5- valve manifold. We recommend factory-mounted transmitters with VM type valve manifold (page IV/ 2). A transmitter without a valve manifold can be fitted in any position on a 2″ pipe or on a wall using the C-2″ mounting bracket (page IV/ 5). When the special process connections are required for the measurement of specific media levels in closed tanks (e.g. in the sugar and chemical industries) the transmitter is fitted with an Aplisens diaphragm seal. Sets of differential pressure transmitters with diaphragm seals are described in detail in the further part of the catalogue.

Measuring ranges

No.	Nominal measuring range (FSO)		Minimum set range		Rangeability	Overpressure limit/ static pressure limit
1	0...70 bar	(0...7 MPa)	7 bar	(700 kPa)	10:1	C-type: 250 / 320 / 413 bar (250 bar for PED version) GP-type: 40 bar (for range no. 1: 70bar)
2	0...16 bar *	(0...1,6 MPa)	1,6 bar	(160 kPa)	10:1	
3	0...2,5 bar	(0...250 kPa)	0,2 bar	(20 kPa)	12,5:1	
4	0...1 bar *	(0...100 kPa)	50 mbar	(5k Pa)	20:1	
5	0...0,25 bar *	(0...25 kPa)	10 mbar	(1k Pa)	25:1	
6	-0,5...0,5 bar *	(-50...50 kPa)	0,1 bar	(10 kPa)	10:1	
7	-100…100 mbar *	(-10…10 kPa)	10 mbar	(1 kPa)	20:1	
8	-5...70 mbar *	(-0,5...7 kPa)	4 mbar	(0,4 kPa)	18:1	
9	-25…25 mbar **	(-2,5…2,5 kPa)	2 mbar	(0,2 kPa)	25:1	
10	-7…7 mbar **	(-700…700 Pa)	1 mbar	(0,1 kPa)	14:1	

** available also in HS version*
*** available only in HS version*

Technical data

Metrological parameters

Accuracy ≤ ±0,075% of the calibrated range
Special version: ≤ ±0,05% of the calibrated range
(≤ ±0,04%, ≤ ±0,025% on request)

Long term stability ≤ accuracy for 3 years
(for the nominal measuring range) or ≤ 2 x accuracy for 5 years
HS version: ≤ accuracy for 10 years

Thermal error < ±0,05% (FSO) / 10°C for ranges no. 1 - 9
< ±0,08% (FSO) / 10°C for ranges no. 10
max. ±0,25% (FSO) in the whole compensation range
spec. version for ranges no 1-9:
≤ ±0,03% (FSO) / 10°C
max. ±0,1% (FSO) in the whole compensation range

Thermal compensation range -25…80°C

Zero shift error for static pressure
0,01% (FSO) / 10 bar for ranges no. 3, 4, 5, 6, 7, 9
0,03% (FSO) / 10 bar for range no. 8
0,06% (FSO) / 10 bar for ranges no. 1, 2
0,01% (FSO) / 10 bar for ranges no. 2, 8 in HS version
0,02% (FSO) / 10 bar for range no. 10
Zeroing the transmitter in conditions of static pressure can eliminate this error.

Additional electronic damping 0…60 s
Error due to supply voltage changes 0,002% (FSO) / V

Electrical parameters

Version	Power supply
standard	10...55 VDC
Exia	10,5…30 VDC
IS	11,5…30 VDC
Exd, XP	13,5…55 VDC
Exia/Exd, IS/XP	11,5…30 VDC / 11,5…55 VDC
Safety, Safety Exd, Safety XP	11,5…36 VDC
Safety Exia, Safety IS	11,5…30 VDC
Safety Exia/Exd, Safety IS/XP	11,5…30 VDC / 11,5…36 VDC

Output signal 4...20 mA + HART

Load resistance (for standard version) $R[\Omega] \le \frac{U_{sup}[V] - 10V}{0{,}0225A}$

Resistance required for communication min. 240 Ω

Materials

Wetted parts type GP, PN: SS316L
type C: SS316L (Hastelloy C276 on request)

Diaphragms SS316L
(Hastelloy C 276, Tantalum, Au on request)

Casing Aluminium
Option: SS316
Material of window: hardened glass

Operating conditions

Operating temperature range (ambient temp.) -25...85°C

Exia, IS version: -25…80°C

Exd, XP version: -25…75°C

Medium temperature range -25...120°C

Safety, 600bar version: -25…85°C

PED, 413bar version: -25…100°C

over 120°C – measurement with use an impulse line or diaphragm seals

CAUTION: the medium must not be allowed to freeze in the impulse line or close to the process connection of the transmitter

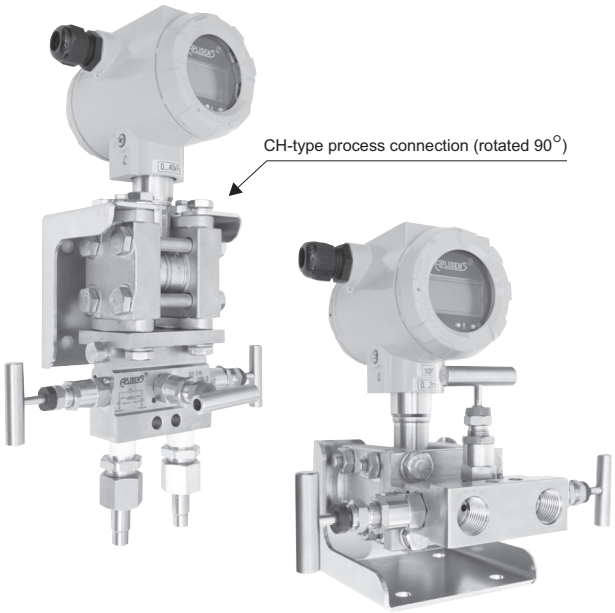

Ordering procedure

Model	Code	Description
APR-2000		Smart differential pressure transmitter
Versions	/ALW /ALW/Safety	With display, output 4-20mA + Hart Functional Safety certificate according to PN-EN 61508:2010 parts 1 ÷ 7, PN-EN 61511-1:2017 + PN-EN 61511-1:2017/A1:2018-03, PN-EN 62061:2008 + PN-EN 62061:2008/A1:2013-06 + PN-EN 62061:2008/A2:2016-01
Certificates, options*	/SS	Stainless steel housing
	/Exia	II 1/2G Ex ia IIC T4/T5 Ga/Gb IECEx Ex ia IIC T4/T5 Ga/Gb
	/Exia (Da)	II 1/2G Ex ia IIC T4/T5 Ga/Gb II 1D Ex ia IIIC T105°C Da I M1 Ex ia I Ma (version with SS housing) Ex ia IIC T4/T5 Ga/Gb IECEx Ex ia IIIC T105°C Da Ex ia I Ma (version with SS housing)
	/IS	IS Class I, Div 1, Groups A, B, C, D T4 IS Class II, Div 1, Groups E, F, G T5 IS Class III, Div 1, T5 Zone 0 AEx/Ex ia IIC T4 Ga Zone 20 AEx/Ex ia IIIC T105°C Da
	/Exd	II 1/2G Ex ia/db IIC T6/T5 Ga/Gb II 1/2D Ex ia/tb IIIC T105°C Da/Db I M2 Exd ia I Mb (version with SS housing) Ex ia/db IIC T6/T5 Ga/Gb IECEx Ex ia/tb IIIC T105°C Da/Db Ex db ia I Mb (version with SS housing) Packing gland available on request
	/Exd (2G)	II 2G Ex ia/db IIC T6/T5 Gb II 2D Ex ia/tb IIIC T105°C Db IECEx Ex ia/db IIC T6/T5 Gb Ex ia/tb IIIC T105°C Db Packing gland available on request
	/XP	XP Class I, Div 1, Groups A, B, C, D T5 DIP Class II, Div 1, Groups E, F, G T5 DIP Class III, Div 1, T5 Zone 1 AEx db ia IIC T5 Gb Zone 21 AEx ia tb IIIC T105°C Db Packing gland available on request
	/XPC	XP Class I, Div 1, Groups B, C, D T5 DIP Class II, Div 1, Groups E, F, G T5 DIP Class III, Div 1, T5 Zone 1 AEx/Ex db ia IIC T5 Gb Zone 21 AEx/Ex ia tb IIIC T105°C Db Packing gland available on request
	/Exia(Da)/Exd	Dual certification Exia(Da) and Exd
	/Exia(Da)/Exd(2G)	Dual certification Exia(Da) and Exd(2G)
	/IS/XP	Dual certification IS and XP for US
	/IS/XPC	Dual certification IS and XPC for US and Canada
	/SA	Surge arrester for Exia version
	/PED	PED category I (only process connection type C)
	/HS	Ultra stable version (only ranges no. 2, 4÷10)
	/0,05%	Accuracy ≤ ±0,05%
	/MR	Marine certificate – DNV, BV
	/Tlen	For oxygen service (sensor filled with Fluorolube fluid)
	/320 bar	Static pressure 320 bar, only for C process connection, not available in PED version
	/413 bar	Static pressure 413 bar, only for C process connection, not available in PED version
	/600 bar	Static pressure 600 bar, only for C process connection, not available in PED version Execution on request – please consult availability with manufacturer
	/IP67	Protection class IP67
	/NACE	NACE MR-01-75 certificate (only process connection type C)
	/Hart 7	Communication protocol HART in revision 7

* more than one option is available

See next page

Code		Description	
		Range	Min. set range
Nominal measuring ranges	/0÷70 bar.....	0÷70 bar (0÷7000 kPa)	7 bar (700 kPa)
	/0÷16 bar.....	0÷16 bar (0÷1600 kPa)	1,6 bar (160 kPa)
	/0÷2,5 bar.....	0÷2,5 bar (0÷250 kP)	0,2 bar (20 kPa)
	/0÷1 bar.....	0÷1 bar (0÷100 kPa)	50 mbar (5 kPa)
	/0÷0,25 bar.....	0÷0,25 bar (0÷25 kPa)	10 mbar (1 kPa)
	/-0,5÷0,5 bar.....	-0,5÷0,5 bar (50÷50 kPa)	0,1 bar (10 kPa)
	/-0,1÷0,1 bar.....	-0,1÷0,1 bar (-10÷10 kPa)	10 mbar (1 kPa)
	/-5÷70 mbar.....	-5÷70 mbar (0,5÷7 kPa)	4 mbar (0,4 kPa)
	/-25÷25 mbar.....	-25÷25 mbar (-2,5÷2,5 kPa)	2 mbar (0,2 kPa)
	/-7÷7 mbar.....	-7÷7 mbar (-0,7÷0,7 kPa)	1 mbar (0,1 kPa)
Measuring set range	/…÷… [required units]	Calibrated range in relation to 4mA and 20mA output	
Process connections	/C.....	Thread 1/4NPT F on the cover flanges cover flanges. Allows mounting with a valve manifold. Process connection of cover flange: M10 (option /C(7/16) - 7/16"UNF acc. to IEC 61518), wetted parts material: choose below	
	/CH.....	C-type process connection rotated 90°	
	/GP.....	Thread G1/2" (male), wetted parts material: SS316L	
	/PN.....	Thread 1/4"NPT (female), wetted parts material: SS316L	
	/code of diaphragm seal.....	Diaphragm seal (see chapter of diaphragm seals) mounted on Hi side of transmitter, Lo side 1/4NPT Female	
Material of wetted parts: (diaphragms/covers) (refers only to C, CH process connection)	(without marking).....	Covers material: SS316L / Diaphragms material: SS316L	
	/(316L/Hast).....	Covers material: SS316L / Diaphragms material: Hastelloy C276	
	/(Hast/Hast).....	Covers material: Hastelloy C276 Cast / Diaphragms material: Hastelloy C276	
	/(316L/Au).....	Covers material: SS316L / Diaphragms material: Gold plated	
	/(316L/Ta).....	Covers material: SS316L / Diaphragms material: Tantalum	
	/(Hast/Ta).....	Covers material: Hastelloy C276 Cast / Diaphragms material: Tantalum	
Gasket (refers only to C, CH process connection)	(without marking).....	FPM Viton (not available for Hast/Hast, Ta/316L and Ta/Hast versions)	
	/NBR.....	NBR (not available for Hast/Hast, Ta/316L and Ta/Hast versions)	
	/PTFE.....	PTFE	
Electrical connection	(without marking)	Packing gland M20x1,5	
	/US.....	Thread 1/2"NPT Female	
Accessories	/C-2".....	Mounting bracket for 2" pipe (to C process conn.), mat. zinced steel	
	/C-2"(SS).....	Mounting bracket for 2" pipe (to C process conn.), mat. ss304	
	/C-2"(SS316)....	Mounting bracket for 2" pipe (to C process conn.), mat. ss316	
	/C-2"B.....	Mounting bracket for 2" pipe (to C(7/16) process conn.), mat. zinced steel	
	/C-2"B(SS).....	Mounting bracket for 2" pipe (to C(7/16) process conn.), mat. ss304	
	/C-2"B(SS316)..	Mounting bracket for 2" pipe (to C(7/16) process conn.), mat. ss316	
	/FI25.....	Mounting bracket for 1" pipe (to P process conn.), mat. Stainless Steel	
	/RedSpaw GP...	Connector to weld impulse pipes dia. 12 and 14 mm, material 15HM(SO) or SS316(S). Only process connection GP type	
	/RedSpaw C.....	Connector to weld impulse pipes dia. 12 and 14 mm, material 15HM. Only process connection C type.	
	/Red d/P 1/2"…	Adapter for differential pressure transmitters with C type process connection, output thread 1/2NPT F. Material SS316L	
	/ST.....	Stainless Steel plate fixed to the housing	
	/MT.....	Stainless Steel Tag plate mounted on wire	
Other specification	/.....	Description of required parameters	

Standard display configuration

	Std. version	Exia, Exia(Da)	IS	Exd	XP	Exia(Da)/Exd, IS/XP	Safety
Backlight on	•	•		•			
Backlight off			•		•	•	•

Other configuration of display has to be marked upon placing order. User has no possibility of switching backlight on/off.

SMART DIFFERENTIAL PRESSURE TRANSMITTER APRE-2000

HART COMMUNICATION PROTOCOL

- ✓ **4…20 mA output signal + HART protocol**
- ✓ **ATEX Intrinsic safety**
- ✓ **Static pressure limit up to 320 bar**
- ✓ **Accuracy 0.1%**
- ✓ **Wetted parts material 316L**

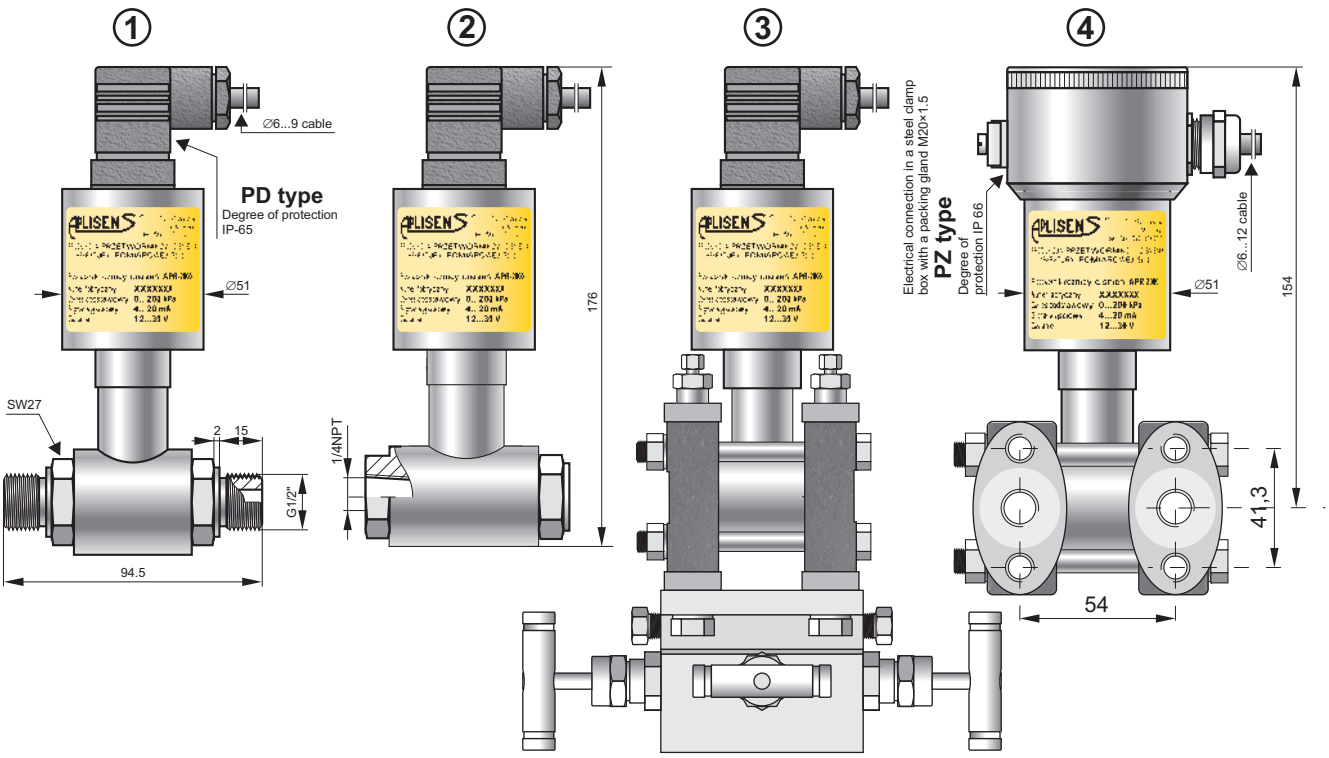

1) Transmitter **APRE-2000PD** version with **GP type** process connection; **2)** Transmitter **APRE-2000PD** version with **PN type** process connection; **3)** Transmitter **APRE-2000PD** – version with **type CH** process connection rotated 90°; **4)** Transmitter **APRE-2000PD** – version with **type C** process connection

Application and construction

The APRE-2000 transmitter is applicable to the measurement of differential pressure of gases, vapors and liquids. The active element is a piezoresistant silicon sensor separated from the medium by separating diaphragms and a specially selected type of manometric fluid. The special design of the active sensing element ensures that it is able to withstand pressure surges and overloads of up to 250 or 320 bar. Electronics in the casing with a degree of protection IP65, IP66.

Communication and configuration

The communication standard for data interchange with the transmitter is the HART protocol.

Communication with the transmitter is carried out with:

- a KAP-03 communicator,
- some other HART type communicators ,(*)
- a PC with the HART/USB converter and Aplisens RAPORT 2 configuration software.

(*) .eddl files available on www.aplisens.com

The data interchange with the transmitter enables user to:

- identify the transmitter;
- configure the output parameters:
  - measurement units and values of the start and end-points of the measuring range;
  - damping time-constant;
  - conversion characteristic (inversion, user's non-linear characteristic);
- read the currently measured pressure value of the output current and the percentage output control level;
- force an output current with a set value;
- calibrate the transmitter in relation to model pressure.

Installation

The transmitter with **P type** process connection is not heavy, so it can be fitted directly onto impulse lines. For fitting in any desired position on a ∅25 pipe an Aplisens mounting bracket (**Fi 25 mounting bracket**, see page IV/ 5) is recommended.

The version with **C type** process connections can be fitted directly to a 3- or 5-valve manifold. We recommend factory-mounted transmitters with VM type valve manifold (see page IV/ 2). A transmitter without a valve manifold can be fitted in any position on a 2″ pipe or on a wall using the **C-2″ mounting bracket** (see page IV/ 5).

When the special process connections are required for the level measurement of media in closed tanks (e.g. in the sugar and chemical industries) the transmitter is fitted with an Aplisens diaphragm seal. Sets of differential pressure transmitters with diaphragm seals are described in detail presented in the further part of the catalogue.

Measuring ranges

No.	Nominal measuring range (FSO)		Minimum set range		Rangeability	Overpressure limit/ static pressure limit
1	0...70 bar	(0...7 MPa)	7 bar	(700 kPa)	10:1	C-type: 250 / 320 bar (250 bar for PED version) GP-type: 40 bar (for range no. 1: 70bar)
2	0...16 bar	(0...1,6 MPa)	1,6 bar	(160 kPa)	10:1	
3	0...2,5 bar	(0...250 kPa)	0,2 bar	(20 kPa)	12,5:1	
4	0...1 bar	(0...100 kPa)	50 mbar	(5k Pa)	20:1	
5	0...0,25 bar	(0...25 kPa)	10 mbar	(1k Pa)	25:1	
6	-0,5...0,5 bar	(-50...50 kPa)	0,1 bar	(10 kPa)	10:1	
7	-100…100 mbar	(-10…10 kPa)	10 mbar	(1 kPa)	20:1	
8	-5...70 mbar	(-0,5...7 kPa)	4 mbar	(0,4 kPa)	18:1	

Technical data

Metrological parameters

Accuracy ≤ ±0,1% of calibrated range

Long term stability ≤ accuracy for 3 years
(for the nominal measuring range) ≤ 2 x accuracy for 5 years

Thermal error < ±0,08% (FSO) / 10°C
max. ±0,3% (FSO) in the whole compensation range

Thermal compensation range -25…80°C

Zero shift error for static pressure
0,01% (FSO) / 10 bar for ranges no. 3, 4, 5, 6, 7
0,03% (FSO) / 10 bar for range no. 8
0,06% (FSO) / 10 bar for ranges no. 1, 2
Zeroing the transmitter in conditions of static pressure can eliminate this error.

Additional electronic damping 0…30 s

Error due to supply voltage changes 0,002% (FSO) / V

Electrical parameters

Power supply
7,5...55 VDC (Ex ia 7,5...30 VDC)

Output signal 4...20 mA + HART

Load resistance $R[\Omega] \le \frac{U_{sup}[V] - 7{,}5V}{0{,}0225A}$

Resistance required for communication min. 240 Ω

Materials

Wetted parts SS316L

Diaphragms SS316L

Casing SS304

Operating conditions

Operating temperature range (ambient temp.) -25...85°C
Exi a version -25…80°C

Medium temperature range -25...120°C
PED version -25...100°C

over 120°C – measurement with use an impulse line or diaphragm seals
up to 100°C – version for 413bar static pressure

CAUTION: the medium must not be allowed to freeze in the impulse line or close to the process connection of the transmitter

Accuracy depending on the set range

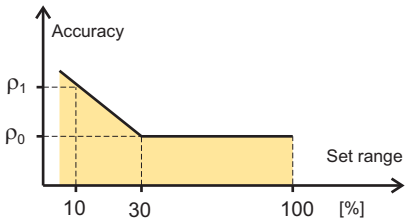

ρ_0 – error for range 30...100% FSO
ρ_1 – error for range 10% FSO
$\rho_1 = 2 \times \rho_0$
Numerical error values are given in the technical data under metrological parameters

Ordering procedure

Model	Code	Description
APRE-2000		Smart differential pressure transmitter
Casing, output signal, electrical connection	/PD……	Housing IP65 with DIN EN 175301-803 connector, without display, output 4-20mA + Hart
	/PZ……	304SS housing, IP66, without display, output 4-20mA + Hart
Versions, certificates	/Exia……	II 1/2G Ex ia IIC T4/T5/T6 Ga/Gb II 1D Ex ia IIIC T110°C Da I M1 Ex ia I Ma Exia for HS version available from Q4/2016
more than one option is available	/Tlen……	For oxygen service (sensor filled with Fluorolube fluid)
	/320 bar……	Static pressure 320 bar, only for C process connection
	/NACE……	NACE MR-01-75 certificate (only process connections type C)

Nominal measuring range	Range	Min. set range
/0÷70 bar……	0÷70 bar (0÷7000 kPa)	7 bar (700 kPa)
/0÷16 bar……	0÷16 bar (0÷1600 kPa)	1,6 bar (160 kPa)
/0÷2,5 bar……	0÷2,5 bar (0÷250 kP)	0,2 bar (20 kPa)
/0÷1 bar……	0÷1 bar (0÷100 kPa)	50 mbar (5 kPa)
/0÷0,25 bar……	0÷0,25 bar (0÷25 kPa)	10 mbar (1 kPa)
/-0,5÷0,5 bar……	-0,5÷0,5 bar (50÷50 kPa)	0,1 bar (10 kPa)
/-0,1÷0,1 bar……	-0,1÷0,1 bar (-10÷10 kPa)	10 mbar (1 kPa)
/-5÷70 mbar……	-5÷70 mbar (0,5÷7 kPa)	4 mbar (0,4 kPa)

Measuring set range	/…+… [required units]	Calibrated range in relation to 4mA and 20mA output
Process connections	/C……	Thread 1/4NPT F on the cover flanges cover flanges material SS316L. Allows mounting with a valve manifold. Process connection of cover flange: M10 (option /C(7/16) - 7/16"UNF acc. to IEC 61518), wetted parts material: SS316L
	/CH……	C-type process connection rotated 90°
	/GP……	Thread G1/2" (male), wetted parts material: SS316L
	/PN……	Thread 1/4"NPT (female), wetted parts material: SS316L
	/code of diaphragm seal……	Diaphragm seal (see chapter of diaphragm seals) mounted on Hi side of transmitter, Lo side 1/4NPT Female
Gasket (refers only to C, CH process connection)	(without marking)……	FPM Viton
	/NBR……	NBR
	/PTFE……	PTFE
Accessories	/C-2"……	Mounting bracket for 2" pipe (to C process conn.), mat. zinced steel
	/C-2"(SS)……	Mounting bracket for 2" pipe (to C process conn.), mat. ss304
	/C-2"(SS316)……	Mounting bracket for 2" pipe (to C process conn.), mat. ss316
	/C-2"B……	Mounting bracket for 2" pipe (to C(7/16) process conn.), mat. zinced steel
	/C-2"B(SS)……	Mounting bracket for 2" pipe (to C(7/16) process conn.), mat. ss304
	/C-2"B(SS316)…	Mounting bracket for 2" pipe (to C(7/16) process conn.), mat. ss316
	/FI25……	Mounting bracket for 1" pipe (to P process conn.), mat. Stainless Steel
	/RedSpaw GP….	Connector to weld impulse pipes dia. 12 and 14 mm, material 15HM(SO) or SS316(S). Only process connection GP type
	/RedSpaw C……	Connector to weld impulse pipes dia. 12 and 14 mm, material 15HM. Only process connection C type.
	/Red d/P 1/2''…..	Adapter for differential pressure transmitters with C type process connection, output thread 1/2NPT F. Material SS316L
Other specification	/……	Description of required parameters

Example 1: Differential pressure transmitter, output 4..20mA + HART, version Exia, static pressure 320bar, nominal measuring range 0..2bar, calibrated range 0..1,6bar, process connection C, stainless steel housing, mounting bracket for 2" pipe

APRE-2000PZ/Exia/320bar/0..2bar/0..1,6bar/C/C-2"

Example 2: Differential pressure transmitter, output 4..20mA + HART, nominal measuring range 0..1bar, calibrated range 0..1bar, process connection flange diaphragm seal DN80PN40 , electrical connection with DIN EN 175301-803 connector.

APRE-2000PD/0..1bar/0..1bar/S-P DN80PN40

SMART DIFFERENTIAL PRESSURE TRANSMITTER
for low ranges APR-2000ALW/G

HART COMMUNICATION PROTOCOL

min. range 0.2 mbar

- ✓ **4...20 mA output signal + HART protocol**
- ✓ **Display with backlight**
- ✓ **Programmable range, zero shift, damping ratio and characteristic with local panel keys**
- ✓ **Selectable linear or radical conversion characteristic**
- ✓ **Accuracy from 0,1%**
- ✓ **Intrinsic safety certificate (ATEX, IECEx)**
- ✓ **Safety version SIL2/SIL3**

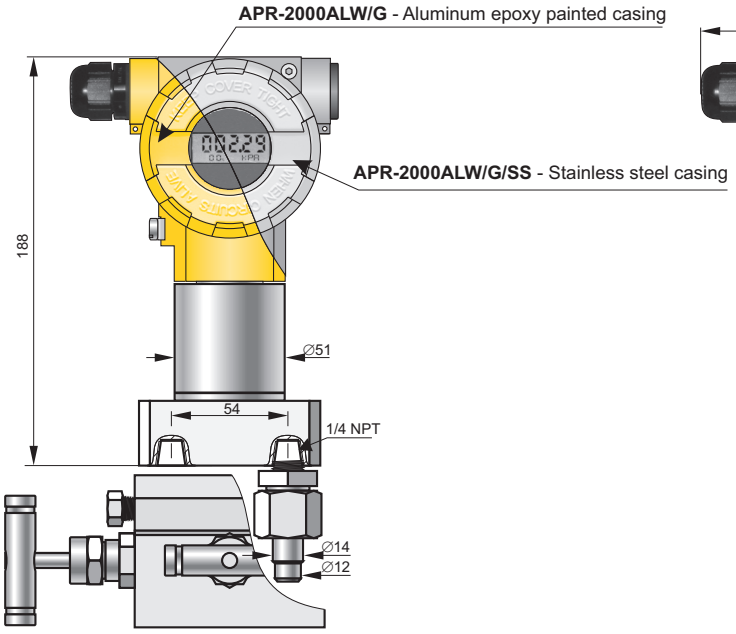

APR-2000ALW/G Industrial Version, **C type** process connector to be mounted along with a valve manifold

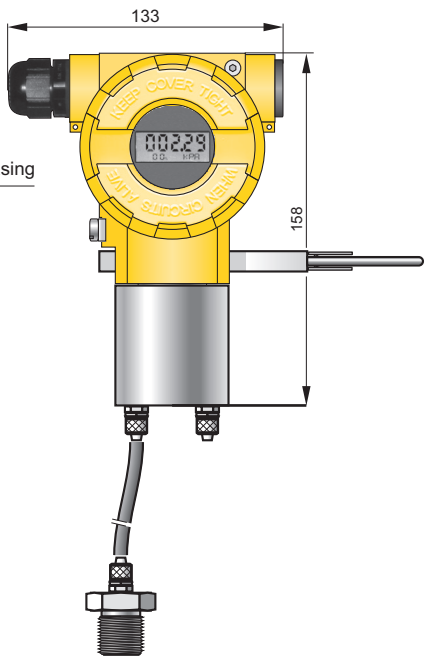

APR-2000ALW/G Economic Version, process connection with terminal connecting to ∅6 pipe (**PCV type**)

Application

The APR-2000ALW/G transmitter is applicable to the measurement of differential pressure of gases. Typical applications include the measurement of blast pressure, chimney draughts or pressure / underpressure in furnace chambers. The ability to select the radical conversion characteristics enables the transmitter to be used in gas-flow measurement systems using reducing pipes or other impeding elements. The transmitter can withstand overpressure up to 1 bar. The housing of the electronic circuit has the degree of protection IP66/IP67.

Configuration, calibration

The following metrological parameters can be configured:

- The units of pressure,
- Start and end-points of measuring range, damping time constant,
- Conversion characteristic (radical, inversion, user's non-linear characteristic).

Ability to calibrate the transmitter with reference to a standard pressure.

Communication

Communication with the transmitter is carried out with a KAP-03 communicator, some other Hart communicators or a PC with an Hart/USB converter and RAPORT 2 configuration software.

Additionally, the data interchange with the transmitter enables the users to identify the transmitter, read the currently measured pressure difference value, output current and percentage of measuring range.

Installation

The economical version can be mounted on any stable construction using the mounting bracket. The transmitter's connection shanks have terminals to be connected to the elastic ∅6×1 impulse line. Where the pulse comes through a metal pipe, we suggest an M20×1.5 adapter for a ∅6×1 fitting using.

The transmitter with a C type connector should be mounted on a 3- or 5-valve manifold. We recommend use VM type valves (page IV/ 2).

Operating guidelines

The transmitter should be mounted in a vertical position. The impulse lines should be connected in such a way that any condensed liquids flew off away from the device.
Where there is a significant difference in height between the place where the transmitter is mounted and the place where the pulse is taken, the measurement may vary with the temperature of the impulse line. Connecting a compensating pipe close to the impulse line, from the transmitter's reference connection shank to the height at which the impulse is taken can minimise this effect.
To prevent dust from entering the measuring cells, the impulse lines should be attached with care, with particular attention to the tightness of the connections between the impulse lines and the transmitter.

Measuring ranges

Nominal measuring range (FSO)	Minimum set range	Overpressure limit	Static pressure limit
0...25 mbar (0...2500 Pa)	1 mbar (100 Pa)	1 bar	350 mbar
-2,5...2,5 mbar (-250...250 Pa)	0,2 mbar (20 Pa)	350 mbar	350 mbar
-7...7 mbar (-700...700 Pa)	1 mbar (100 Pa)	350 mbar	350 mbar
-25...25 mbar (-2500...2500 Pa)	5 mbar (500 Pa)	1 bar	1 bar
-100…100 mbar (-10...10 kPa)	20 mbar (2 kPa)	1 bar	1 bar

Meterological parameters

Nominal range	0...25 mbar	-2,5...2,5 mbar	-7...7 mbar	-25...25 mbar	-100…100 mbar
Accuracy	≤ ±0,075%	≤ ±0,25%	≤ ±0,1%	≤ ±0,1%	≤ ±0,075%

Thermal error < ±0,1% (FSO) / 10°C
max. ±0,4% (FSO) in the whole compensation range
Thermal compensation range -10…70°C
Additional electronic damping 0…30 s
Error due to supply voltage changes 0,002% (FSO) / V

Electrical parameters

Power supply 10...55 VDC (Exia 10,5...30 V DC)
Safety: 11,5...36 VDC (Exia 11,5...30 V DC)

Output signal 4...20 mA + HART

Load resistance **(for standard version)** $R[\Omega] \leq \frac{U_{sup}[V]-10V}{0,0225A}$

Resistance required for communication min. 240 Ω

Operating conditions

Operating temperature range (ambient temp.) -30...85°C

Materials

Casing Aluminium
option: 316ss
adapter C type, 304ss
adapter PCV type (on ∅6 elastic pipe) brass

Ordering procedure

Model	Code	Description
APR-2000		Smart differential pressure transmitter
Versions	/ALW/G…… /ALW/Safety/G.....	With display, output 4-20mA + Hart With display, output 4-20mA + Hart, Functional Safety certificate according to PN-EN 61508:2010 parts 1 ÷ 7, PN-EN 61511-1:2017 + PN-EN 61511-1:2017/A1:2018-03, PN-EN 62061:2008 + PN-EN 62061:2008/A1:2013-06 + PN-EN 62061:2008/A2:2016-01
Certificates, options	/SS…… /Exia…… /Exia (Da)…… /SA…… /IP67……	Stainless steel housing II 1/2G Ex ia IIC T4/T5 Ga/Gb **IECEx** Ex ia IIC T4/T5 Ga/Gb II 1/2G Ex ia IIC T4/T5 Ga/Gb II 1D Ex ia IIIC T105°C Da I M1 Ex ia I Ma (version with SS housing) Ex ia IIC T4/T5 Ga/Gb **IECEx** Ex ia IIIC T105°C Da Ex ia I Ma (version with SS housing Surge arrester for Exia version Protection class IP67

Nominal measuring range	Range	Min. set range
/0÷25 mbar……	0÷25 mbar (0÷2500 Pa)	1mbar (100 Pa)
/-2,5÷2,5 mbar……	-2.5÷2.5mbar (250÷250 Pa)	0,2 mbar (20 Pa)
/-7÷7 mbar……	-7÷7 mbar (700÷700 Pa)	1mbar (100 Pa)
/-25÷25 mbar……	-25÷25 mbar (2500÷2500 Pa)	5mbar (500 Pa)
/-100÷100 mbar……	-100÷100mbar (10÷10 kPa)	20mbar (2 kPa)

Measuring set range	/…÷… [required units]	Calibrated range in relation to 4mA and 20mA output
Process connections	/PCV…… /C……	Process connection with terminal connecting for ∅6mm elastic pipe. Thread 1/4 NPT F on cover flange. Material of cover flange 304Lss. Allows mounting with a valve manifold.
Electrical connection	(without marking) /US……	Packing gland M20x1,5 Thread 1/2"NPT Female
Accessories	/AL…… /AL(SS)…… /AL(SS316)…… /M20x1,5/∅6…… /RedSpaw C…… /+VM-3/A…… /+VM-5/A…… /ST…… /MT……	Mounting bracket type AL for 2" pipe, material zinced steel Mounting bracket type AL for 2" pipe, material ss304 Mounting bracket type AL for 2" pipe, material ss316 Adapters from ∅ 6mm elastic pipe for M20x1,5 M thread (only version with PCV process connection) Connector to weld impulse pipes dia. 12 and 14 mm, material 15HM. (only version with process connection C type) Assembled with a 3-way valve manifold (further specification of manifold - see data sheet) . Only version with C type process connection. Assembled with a 5-way valve manifold (further specification of manifold - see data sheet) . Only version with C type process connection. Stainless Steel plate fixed to the housing Stainless Steel Tag plate mounted on wire
Other specification	/……	Description of required parameters

Example 1: Differential pressure transmitter with display, nominal range -7÷7mbar, set range -0,5÷1mbar, PCV type process connection, two additional M20x1,5/Ø6x1 adapters.

APR-2000ALW/G/-7÷7mbar/-0,5÷1mbar/PCV/2xM20x1,5/Ø6x1

Example 2: Differential pressure transmitter with display, nominal range 0÷25mbar, set range 0÷4 mbar, C type process connection, mounted with a 3-way valve manifold.

APR-2000ALW/G/0÷25mbar/0÷4mbar/C/VM-3/A

SMART DIFFERENTIAL PRESSURE TRANSMITTER for low ranges APRE-2000G

min. range 0.2 mbar

- ✓ **Programmable range, zero shift, damping ratio and characteristic**
- ✓ **4...20 mA output signal + HART protocol**
- ✓ **Accuracy from 0.1%**
- ✓ **ATEX Intrinsic safety (only APRE-2000G/PD, APRE-2000G/PZ)**

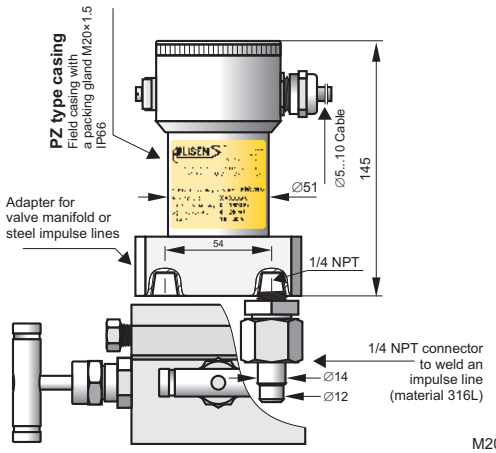

APRE-2000G Industrial Version, **C type** process connector to be mounted along with a valve manifold an example with **PZ type** Electrical Connection

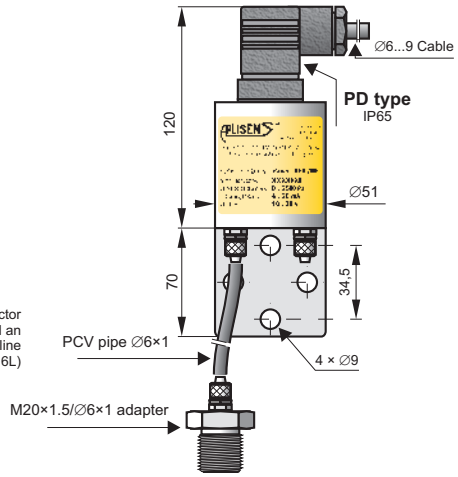

APRE-2000G Economic Version, process connection with terminal connecting to Ø6 pipe (**PCV type**). An example with **PD type** Electrical Connection

APRE-2000G/N wall-mounted version with display and local keys allowing programming, process connection **PCV type**. Dimensions: width: 80, height: 110, depth: 67

Application

The APRE-2000G transmitter is applicable to gases, to the measurements of their pressure, underpressure and differential pressure. Typical applications include the measurement of blast pressure, chimney draughts or pressure / underpressure in furnace chambers. The ability to select the radical conversion characteristics enables the transmitter to be used in gas-flow measurement systems using reducing pipes or other impeding elements. The transmitter can withstand overpressure up to 1 bar. The housing of the electronic circuit has the degree of protection IP65, IP66 , IP67.

Configuration, calibration

The following metrological parameters can be configured:

- The units of pressure,
- Start and end-points of measuring range, damping time constant,
- Conversion characteristic (radical, inversion, user's non-linear characteristic).

Ability to calibrate the transmitter with reference to a standard pressure.

Communication

Communication with the transmitter is carried out with a KAP-03 communicator, some other Hart communicators or a PC with an HART/USB converter and RAPORT 2 configuration software.

Additionally, the data interchange with the transmitter enables the users to identify the transmitter, read the currently measured pressure difference value, output current and percentage of measuring range.

Installation

The economical version can be mounted on any stable construction using the assembly fixture with Ø9 opening. The transmitter's connection shanks have terminals to be connected to the elastic Ø6×1 impulse line. Where the pulse comes through a metal pipe, we suggest an M20×1.5 adapter for a Ø6×1 fitting using.

The transmitter with a C type connector should be mounted on a 3- or 5-valve manifold. We recommend to use our pre-assembled transmitters with VM type valves (page IV/ 2).

Operating guidelines

The transmitter should be mounted in a vertical position. The impulse lines should be connected in such a way that any condensed liquids flew off away from the device.
Where there is a significant difference in height between the place where the transmitter is mounted and the place where the pulse is taken, the measurement may vary with the temperature of the impulse line. Connecting a compensating pipe close to the impulse line, from the transmitter's reference connection shank to the height at which the impulse is taken can minimise this effect.
To prevent dust from entering the measuring cells, the impulse lines should be attached with care, with particular attention to the tightness of the connections between the impulse lines and the transmitter.

Measuring ranges

Nominal measuring range (FSO)	Minimum set range	Overpressure limit	Static pressure limit
0...25 mbar (0...2500 Pa)	1 mbar (100 Pa)	1 bar	350 mbar
-2,5...2,5 mbar (-250...250 Pa)	0,2 mbar (20 Pa)	350 mbar	350 mbar
-7...7 mbar (-700...700 Pa)	1 mbar (100 Pa)	350 mbar	350 mbar
-25...25 mbar (-2500...2500 Pa)	5 mbar (500 Pa)	1 bar	1 bar
-100…100 mbar (-10...10 kPa)	20 mbar (2 kPa)	1 bar	1 bar

Meterological parameters

Nominal range	0...25 mbar	-2,5...2,5 mbar	-7...7 mbar	-25...25 mbar	-100…100 mbar
Accuracy	≤ ±0,075%	≤ ±0,25%	≤ ±0,1%	≤ ±0,1%	≤ ±0,075%

Technical data

Thermal error < ±0,1% (FSO) / 10°C
max. ±0,4% (FSO) in the whole compensation range
Thermal compensation range -10…70°C
Additional electronic damping 0…30 s
Error due to supply voltage changes 0,002% (FSO) / V

Electrical parameters

Power supply
APRE-2000G/PD and PZ 7,5...55 VDC (Exia 7,5...30 VD C)
APRE-2000G/N 10...55 VD C
Output signal 4...20 mA + HART
Load resistance $R[\Omega] \leq \frac{U_{sup}[V] - U^*}{0{,}0225A}$
U* - APRE-2000G/PD and PZ: 7,5 VD C
APRE-2000G/N: 12 VD C
Resistance required for communication min. 240 Ω

Operating conditions

Operating temperature range (ambient temp.) -30...85°C
Exia version: -25...80°C
APRE-2000G/N: -25...60°C

Materials

APRE-2000G/PD and PZ:
Casing SS304
adapter C type SS304
adapter PCV type (on ∅6 elastic pipe) brass
APRE-2000G/N:
Casing plastic box

Ordering procedure

Model	Code	Description	
APRE-2000G		Smart differential pressure transmitter	
Certificates	/Exia…….....	II 1/2G Ex ia IIC T4/T5/T6 Ga/Gb II 1D Ex ia IIIC T110°C Da I M1 Ex ia I Ma	
Casing, output signal	/PD……..……..…… /PZ……..……..…….. /N……	Housing IP65 with DIN EN 175301-803 connector, without display, output 4-20mA + Hart 304SS housing, IP66, without display, output 4-20mA + Hart Housing IP65, electrical connector PG-7 (ATEX version not available)	
Nominal measuring range		Range	Min. set range
	/0÷25 mbar.....….	0÷25 mbar (0÷2500 Pa)	1mbar (100 Pa)
	/-2,5÷2,5 mbar….....	-2.5÷2.5mbar (250÷250 Pa)	0,2 mbar (20 Pa)
	/-7÷7 mbar.....….	-7÷7 mbar (700÷700 Pa)	1mbar (100 Pa)
	/-25÷25 mbar.....	-25÷25 mbar (2500÷2500 Pa)	5mbar (500 Pa)
	/-100÷100 mbar….....	-100÷100mbar (10÷10 kPa)	20mbar (2 kPa)
Measuring set range	/…÷… [required units]	Calibrated range in relation to 4mA and 20mA output	
Process connections	/PCV.....	Process connection with terminal connecting for ∅6mm elastic pipe. Mounting bracket for wall mounting is a standard.	
	/C….....	Thread 1/4 NPT F on cover flange. Material of cover flange 304ss. Allows mounting with a valve manifold.	
Accessories	/M20x1,5/∅6.....	Adapter from ∅ 6mm elastic pipe for M20x1,5 M thread (only version with PCV process connection)	
	/RedSpaw C…..	Connector to weld impulse pipes dia. 12 and 14 mm, material 15HM. (only version with process connection C type)	
	/+VM-3/A……	Assembled with a 3-way valve manifold (further specification of manifold - see data sheet) . Only version with C type process connection.	
	/+VM-5/A……	Assembled with a 5-way valve manifold (further specification of manifold - see data sheet) . Only version with C type process connection.	
Other specification	/.....	Description of required parameters	

Example 1: Differential pressure transmitter , nominal measuring range -7...7mbar, stainless steel casing, calibrated 0,5..1mbar, process connecition PCV to elastic pipe ∅6mm plus two adapters from elastic pipe ∅6mm for M20x1.5 M thread

APRE-2000G/PZ/-7...7mabr/-0,5...1mbar/PCV/M20x1,5/∅6mm (x2)

Example 2: Differential pressure transmitter , nominal measuring range -7...7mbar, calibrated 0...7mbar process connecition PCV to elastic pipe ∅6mm, wall mounted version

APRE-2000G/N/-7...7mabr/0...7mbar/PCV

SMART DIFFERENTIAL PRESSURE TRANSMITTER PRE-28.SMART

HART COMMUNICATION PROTOCOL

- ✓ 4…20 mA output signal + HART protocol
- ✓ Intrinsic safety certificate (ATEX, IECEx)
- ✓ Explosion proof certificate (ATEX, IECEx)
- ✓ Static pressure limit up to 413 bar
- ✓ Accuracy 0,1%
- ✓ Wetted parts material 316L
- ✓ Marine certificate DNV, BV

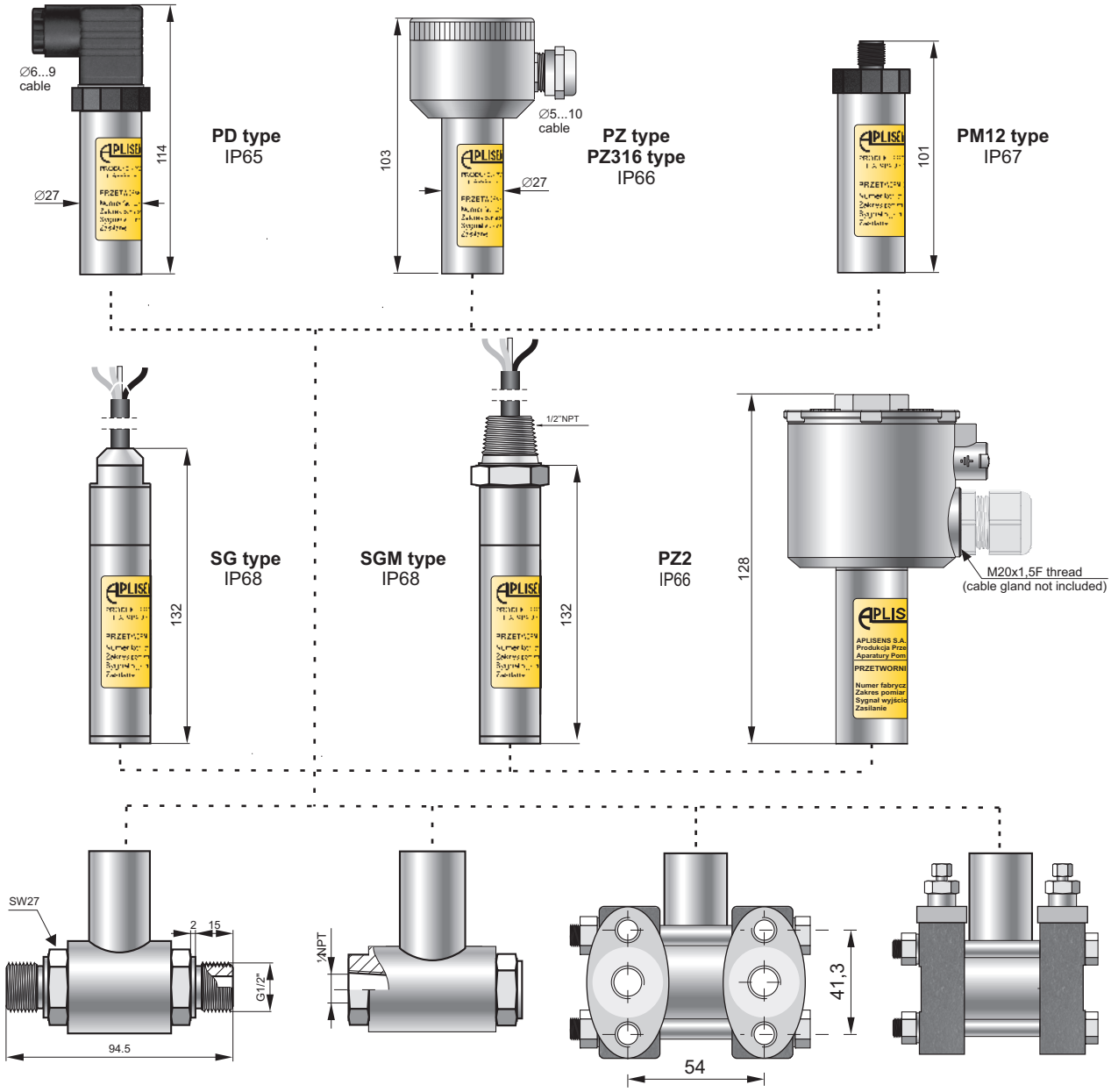

GP type process connection

PN type process connection

C type process connection to mount with a valve manifold

CH type process connection to mount with a valve manifold

Measuring ranges

No.	Nominal measuring range (FSO)		Minimum set range		Rangeability	Overpressure limit/ static pressure limit
1	0...70 bar	(0...7 MPa)	7 bar	(700 kPa)	10:1	C-type: 250 / 320 / 413 bar GP-type 40 bar (for range no. 1: 70bar)
2	0...16 bar	(0...1,6 MPa)	1,6 bar	(160 kPa)	10:1	
3	0...2,5 bar	(0...250 kPa)	0,2 bar	(20 kPa)	12,5:1	
4	0...1 bar	(0...100 kPa)	50 mbar	(5k Pa)	20:1	
5	0...0,25 bar	(0...25 kPa)	10 mbar	(1k Pa)	25:1	
6	-0,5...0,5 bar	(-50...50 kPa)	0,1 bar	(10 kPa)	10:1	
7	-100…100 mbar	(-10…10 kPa)	10 mbar	(1 kPa)	20:1	
8	-5...70 mbar	(-0,5...7 kPa)	4 mbar	(0,4 kPa)	18:1	

Technical data

Metrological parameters

Accuracy ≤ ±0,1% of calibrated range

Long-term stability ≤ accuracy for 3 years
(for the basic range)

Thermal error < ±0,08% (FSO) / 10°C
max. ±0,3% (FSO) in the whole compensation range

Thermal compensation range -25…80°C

Zero shift error for static pressure
0,01% (FSO) / 10 bar for ranges no. 3, 4, 5, 6, 7
0,03% (FSO) / 10 bar for range no. 8
0,06% (FSO) / 10 bar for ranges no. 1, 2
Zeroing the transmitter in conditions of static pressure can eliminate this error.

Additional electronic damping 0…30 s

Error due to supply voltage changes 0,002% (FSO) / V

Electrical parameters

Power supply
7,5...55 VDC (Ex ia 7,5...30 VDC)

Output signal 4...20 mA + HART

Load resistance $R[\Omega] \le \frac{U_{sup}[V] - 7{,}5V}{0{,}0225A}$

Resistance required for communication min. 240 Ω

Materials

Wetted parts SS316L

Diaphragms SS316L, Au

Casing: SS304
Optional: SS316

Operating conditions

Operating temperature range (ambient temp.) -25...85°C
Exia version -25…80°C

Medium temperature range -25...120°C
over 120°C – measurement with use an impulse line or diaphragm seals
up to 100°C – version for 413bar static pressure
CAUTION: the medium must not be allowed to freeze in the impulse line or close to the process connection of the transmitter

Accuracy depending on the set range

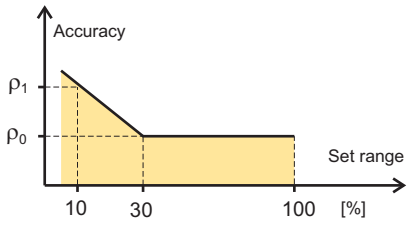

ρ_0 – error for range 30...100% FSO
ρ_1 – error for range 10% FSO
$\rho_1 = 2 \times \rho_0$
Numerical error values are given in the technical data under metrological parameters

Ordering procedure

Model	Code	Description
PRE-28.SMART		Smart differential pressure transmitter
Versions, certificates	/Exia	II 1/2G Ex ia IIC T4/T5/T6 Ga/Gb II 1D Ex ia IIIC T105°C Da I M1 Ex ia I Ma IECEx Ex ia IIC T4/T5/T6 Ga/Gb Ex ia IIIC T105°C Da Ex ia I Ma For PM12, PKD version: II 1/2G Ex ia IIC T4/T5/T6 Ga/Gb IECEx Ex ia IIC T4/T5/T6 Ga/Gb For ALW, ALM version: II 1/2G Ex ia IIC T4 Ga/Gb II 1D Ex ia IIIC T105°C Da IECEx Ex ia IIC T4 Ga/Gb Ex ia IIIC T105°C Da
	/Exd	II 2G Ex db IIC T6/T5/T4 Gb (only SGM or FL casing) II 2D Ex tb IIIC T85°C/T100°C/T120°C Db (only SGM or FL casing) I M2 Ex db I Mb (only for PZ2 casing) IECEx Ex db IIC T6/T5/T4 Gb (only SGM or FL casing) Ex tb IIIC T85°C/T100°C/T120°C D (only SGM or FL casing) Ex db I Mb (only for PZ2 casing)
	/MR	Marine certificate – DNV, BV (not available in ALW and ALM version)
	/Tlen	For oxygen service (sensor filled with Fluorolube fluid)
more than one option is available	/320 bar	Static pressure 320 bar, only for C process connection
	/413 bar	Static pressure 413 bar, only for C process connection
	/NACE	NACE MR-01-75 certificate (process connections: C)

Nominal measuring range		Range	Min. set range
	/0÷70 bar	0÷70 bar (0÷7000 kPa)	7 bar (700 kPa)
	/0÷16 bar	0÷16 bar (0÷1600 kPa)	1,6 bar (160 kPa)
	/0÷2,5 bar	0÷2,5 bar (0÷250 kP)	0,2 bar (20 kPa)
	/0÷1 bar	0÷1 bar (0÷100 kPa)	50 mbar (5 kPa)
	/0÷0,25 bar	0÷0,25 bar (0÷25 kPa)	10 mbar (1 kPa)
	/-0,5÷0,5 bar	-0,5÷0,5 bar (50÷50 kPa)	0,1 bar (10 kPa)
*) non-standard ranges available on request	/-0,1÷0,1 bar	-0,1÷0,1 bar (-10÷10 kPa)	10 mbar (1 kPa)
	/-5÷70 mbar	-5÷70 mbar (0,5÷7 kPa)	4 mbar (0,4 kPa)

Measuring set range	/…÷… [required units]	Calibrated range in relation to 4mA and 20mA output
Casing, electrical connection	/PD	Housing IP65 with DIN EN 175301-803 connector
	/PZ	304SS housing, IP66, packing gland M20x1,5
	/PZ316	316SS housing, IP66, packing gland M20x1,5
	/PM12	304SS housing, IP67 with thread M12x1 and connector with cable (3 m in standard)
	/SG	316LSS housing, IP68, cable electrical connection (3 m of cable in standard)
	/SGM	316LSS housing, IP68, cable electrical connection (3 m of cable in standard)
	/FL (1/2"NPTM)	316LSS housing, flying leads (2 m of flying leads in standard) (only for Exd version)
	/PZ2	304SS housing, IP66, electrical connection M20x1,5F (only for Exd version)
Process connections	/C	Thread 1/4NPT F on the cover flanges, cover flanges material SS316L, diaphragm material SS316L. Allows mounting with a valve manifold. Process connection of cover flange: M10 (option /C(7/16) - 7/16"UNF acc. to IEC 61518
	/C(316/Au)	Thread 1/4NPT F on the cover flanges, cover flanges material SS316L, diaphragm material Au. Allows mounting with a valve manifold. Process connection of cover flange: M10 (option /C(7/16) - 7/16"UNF acc. to IEC 61518)
	/CH	C-type process connection rotated 90°
	/GP	Thread G1/2" (male), wetted parts material: SS316L
	/PN	Thread 1/4"NPT (female), wetted parts material: SS316L
	/code of diaphragm seal	Diaphragm seal (see chapter of diaphragm seals) mounted on Hi side of transmitter, Lo side 1/4NPT Female
Gasket (refers only to C, CH process connection)	(without marking)	FPM Viton
	/NBR	NBR
	/PTFE	PTFE
Accessories	/C-2"	Mounting bracket for 2" pipe (to C process conn.), mat. zinced steel
	/C-2"(SS)	Mounting bracket for 2" pipe (to C process conn.), mat. ss304
	/C-2"(SS316)	Mounting bracket for 2" pipe (to C process conn.), mat. ss316
	/C-2"B	Mounting bracket for 2" pipe (to C(7/16) process conn.), mat. zinced steel
	/C-2"B(SS)	Mounting bracket for 2" pipe (to C(7/16) process conn.), mat. ss304
	/C-2"B(SS316)	Mounting bracket for 2" pipe (to C(7/16) process conn.), mat. ss316
	/FI25	Mounting bracket for 1" pipe (to P process conn.), mat. Stainless Steel
	/RedSpaw GP	Connector to weld impulse pipes dia. 12 and 14 mm, material 15HM(SO) or SS316(S). Only process connection GP type
	/RedSpaw C	Connector to weld impulse pipes dia. 12 and 14 mm, material 15HM. Only process connection C type.
	/Red d/P 1/2"	Adapter for differential pressure transmitters with C type process connection, output thread 1/2NPT F. Material SS316L
Other specification	/.....	Description of required parameters

DIFFERENTIAL PRESSURE TRANSMITTER PRE-28.MODBUS

- ✓ **Digital communication protocol Modbus RTU**
- ✓ **Intrinsic safety certificates (ATEX, IECEx)**
- ✓ **Explosion proof certificates (ATEX, IECEx)**
- ✓ **Accuracy 0.1%**
- ✓ **Static pressure limit up to 413 bar**
- ✓ **Marine certificate DNV, BV**

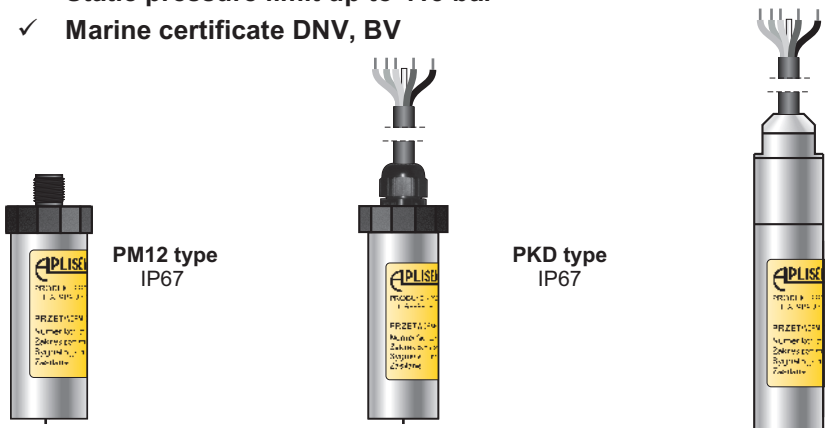

PM12 type
IP67

PKD type
IP67

SG type
IP68

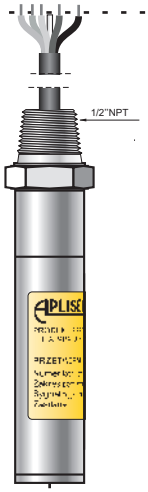

SGM (1/2"NPTM)
cable connection
IP68
(IP66 for gauge pressure <80bar)

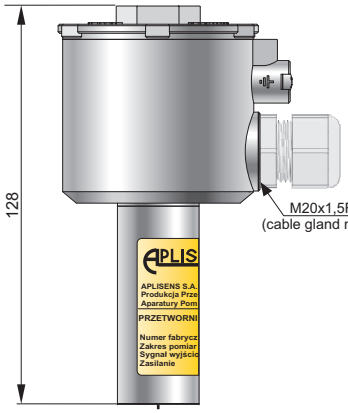

PZ2
IP66

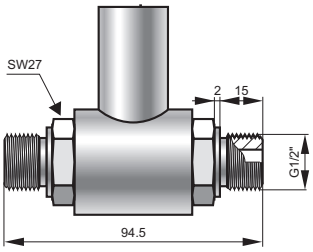

GP type process connection

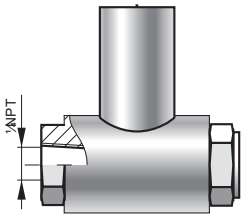

PN type process connection

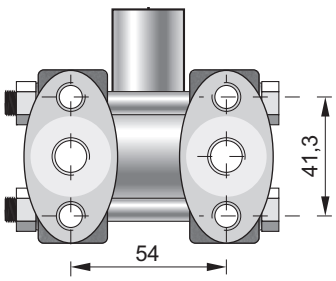

C type process connection to mount with a valve manifold

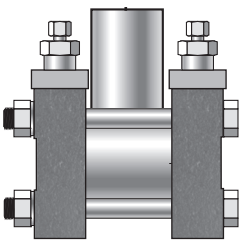

CH type process connection to mount with a valve manifold

Application

The transmitters PRE-28.Modbus have two operating modes, configuration mode and Modbus mode. The configuration mode is used for changing settings and detailed diagnostics of the transmitter. In this mode you can also activate a current loop compatible with a 4-20 mA current output.

Measuring ranges

No.	Nominal measuring range (FSO)		Minimum set range		Rangeability	Overpressure limit/ static pressure limit
1	0...70 bar	(0...7 MPa)	7 bar	(700 kPa)	10:1	C-type: 250 / 320 / 413 bar GP-type 40 bar (for range no. 1: 70bar)
2	0...16 bar	(0...1,6 MPa)	1,6 bar	(160 kPa)	10:1	
3	0...2,5 bar	(0...250 kPa)	0,2 bar	(20 kPa)	12,5:1	
4	0...1 bar	(0...100 kPa)	50 mbar	(5k Pa)	20:1	
5	0...0,25 bar	(0...25 kPa)	10 mbar	(1k Pa)	25:1	
6	-0,5...0,5 bar	(-50...50 kPa)	0,1 bar	(10 kPa)	10:1	
7	-100…100 mbar	(-10…10 kPa)	10 mbar	(1 kPa)	20:1	
8	-5...70 mbar	(-0,5...7 kPa)	4 mbar	(0,4 kPa)	18:1	

Technical data

Metrological parameters

Accuracy ≤ ±0,1% of calibrated range

Long-term stability (for the basic range) ≤ accuracy for 3 years

Thermal error < ±0,08% (FSO) / 10°C
max. ±0,3% (FSO) in the whole compensation range

Thermal compensation range -25...80°C

Zero shift error for static pressure
0,01% (FSO) / 10 bar for ranges no. 3, 4, 5, 6, 7
0,03% (FSO) / 10 bar for range no. 8
0,06% (FSO) / 10 bar for ranges no. 1, 2
Zeroing the transmitter in conditions of static pressure can eliminate this error.

Error due to supply voltage changes 0.002% (FSO) / V

Materials

Wetted parts and diaphragms: 316Lss
Casing: 304ss (optional: 316ss)

Electrical parameters

Power supply 4…28 V DC
Exia version: 4…10 V DC
in 4…20mA mode (only non Exia version): 5..28 V DC

Transmission range 1200 m

Output MODBUS RTU or 4…20 mA

Address space 1…247 devices address

Transmission speed 1200, 2400, 4800, 9600, 19200, 28800, 38400, 57600, 115200 bps

Parity transmission no parity, odd, even

Frame transmission 10…11bits (1, 2 bit-stop)

** more information about electrical parameters available in user's manual*

Ordering procedure

Model	Code	Description
PRE-28.Modbus		Smart differential pressure transmitter
Versions, certificates	/Exia	Ex II 1/2G Ex ia IIC T4/T5/T6 Ga/Gb IECEx Ex ia IIC T4/T5/T6 Ga/Gb } for PM12, PKD el. connection
	/Exd	Ex II 1/2G Ex ia IIC T4/T5/T6 Ga/Gb II 1D Ex ia IIIC T110°C Da I M1 Ex ia I Ma IECEx Ex ia IIC T4/T5/T6 Ga/Gb Ex ia IIIC T105°C Da Ex ia I Ma } for SG el. connection Ex II 2G Ex db IIC T6/T5/T4 Gb II 2D Ex tb IIIC T85°C/T100°C/T120°C Db IECEx Ex db IIC T6/T5/T4 Gb Ex tb IIIC T85°C/T100°C/T120°C D } for SGM and PZ2 el. connection
	/MR	Marine certificate – DNV, BV (not available in ALW and ALM version)
	/TIen	For oxygen service (sensor filled with Fluorolube fluid)
more than one option is available	/320 bar	Static pressure 320 bar, only for C process connection
	/413 bar	Static pressure 413 bar, only for C process connection
	/NACE	NACE MR-01-75 certificate (process connections: C)

Nominal measuring range	Range	Min. set range
/0÷70 bar	0÷70 bar (0÷7000 kPa)	7 bar (700 kPa)
/0÷16 bar	0÷16 bar (0÷1600 kPa)	1,6 bar (160 kPa)
/0÷2,5 bar	0÷2,5 bar (0÷250 kP)	0,2 bar (20 kPa)
/0÷1 bar	0÷1 bar (0÷100 kPa)	50 mbar (5 kPa)
/0÷0,25 bar	0÷0,25 bar (0÷25 kPa)	10 mbar (1 kPa)
/-0,5÷0,5 bar	-0,5÷0,5 bar (50÷50 kPa)	0,1 bar (10 kPa)
/-0,1÷0,1 bar	-0,1÷0,1 bar (-10÷10 kPa)	10 mbar (1 kPa)
/-5÷70 mbar	-5÷70 mbar (0,5÷7 kPa)	4 mbar (0,4 kPa)

*) non-standard ranges available on request

Casing, electrical connection	/PM12	304SS housing, IP67 with thread M12x1 (without cable)
	/PKD	304SS housing, IP67, cable electrical connection (3 m in standard)
	/SG	316LSS housing, IP68, cable electrical connection (3 m in standard)
	/SGM	316LSS housing, IP68 or IP66, cable electrical connection (3 m in standard)
	/PZ2	304SS housing, IP66 (only for Exd version)
Process connections	/C	Thread 1/4NPT F on the cover flanges cover flanges material SS316L. Allows mounting with a valve manifold. Process connection of cover flange: M10 (option /C(7/16) - 7/16"UNF acc. to IEC 61518), wetted parts material: SS316L
	/CH	C-type process connection rotated 90°
	/GP	Thread G1/2" (male), wetted parts material: SS316L
	/PN	Thread 1/4"NPT (female), wetted parts material: SS316L
	/code of diaphragm seal	Diaphragm seal (see chapter of diaphragm seals) mounted on Hi side of transmitter, Lo side 1/4NPT Female
Gasket (refers only to C, CH process connection)	(without marking)	FPM Viton
	/NBR	NBR
	/PTFE	PTFE
Accessories	/C-2"	Mounting bracket for 2" pipe (to C process conn.), mat. zinced steel
	/C-2"(SS)	Mounting bracket for 2" pipe (to C process conn.), mat. ss304
	/C-2"(SS316)	Mounting bracket for 2" pipe (to C process conn.), mat. ss316
	/C-2"B	Mounting bracket for 2" pipe (to C(7/16) process conn.), mat. zinced steel
	/C-2"B(SS)	Mounting bracket for 2" pipe (to C(7/16) process conn.), mat. ss304
	/C-2"B(SS316)	Mounting bracket for 2" pipe (to C(7/16) process conn.), mat. ss316
	/FI25	Mounting bracket for 1" pipe (to P process conn.), mat. Stainless Steel
	/RedSpaw GP	Connector to weld impulse pipes dia. 12 and 14 mm, material 15HM(SO) or SS316(S). Only process connection GP type
	/RedSpaw C	Connector to weld impulse pipes dia. 12 and 14 mm, material 15HM. Only process connection C type.
	/Red d/P 1/2"	Adapter for differential pressure transmitters with C type process connection, output thread 1/2NPT F. Material SS316L
Other specification	/	Description of required parameters

DIFFERENTIAL PRESSURE TRANSMITTER PRE-28

- ✓ **Overloads up to 413 bar total static pressure**
- ✓ **Accuracy 0,25%**
- ✓ **Any range from 0…16 mbar up to 0…25 bar**
- ✓ **Intrinsic safety certificate (ATEX, IECEx)**
- ✓ **Marine certificate – DNV, BV**

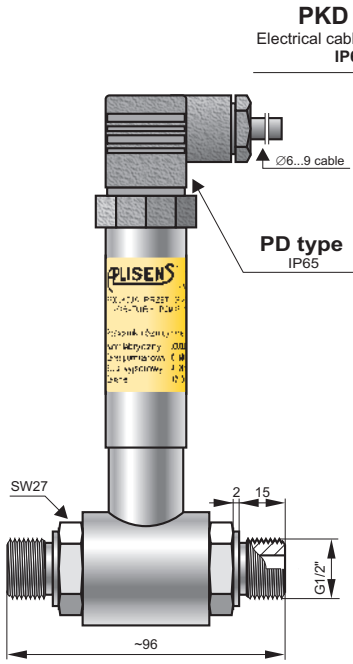

Transmitter **PRE-28**
Process connection **GP type.**

Transmitter **PRE-28**
Process connection **PN type**.

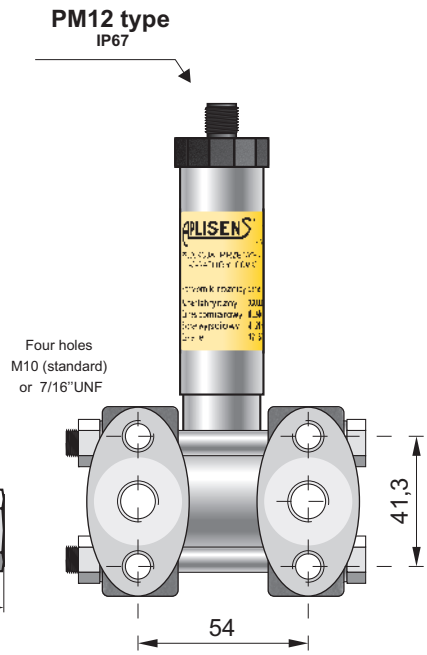

Transmitter **PRE-28** – version with **type C** connection to be mounted together with a valve manifold.

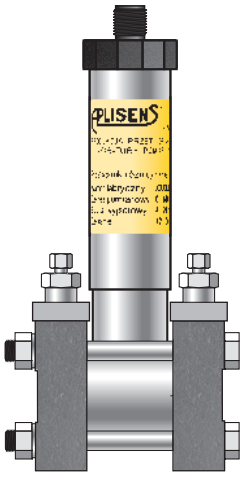

Transmitter **PRE-28** – version with **type CH** connection to be mounted together with a valve manifold.

Application

The PRE-28 transmitter is applicable to the measurement of dofferential pressure of gases, vapours and liquids.

Construction

The active element is a piezoresistance silicon sensor separated from the medium by separating diaphragm and a specially selected type of manometric fluid. The special desing of theactive sensing element ensures withstanding the pressure surges and overloads of up to 413bar. The electronics is placed in a casing with a degree of protection IP65, IP67, depending on the type of electrical connection applied.

Calibration

Potentiometers can be used to shift the zero position and the range by up to 10%, without altering the settings.

Installation

The transmitter with GP type process connection is not heavy, so it can be installed directly onto impulse lines. For fitting in any desired position on a ∅25 pipe the Aplisens mounting bracket (FI25 mounting bracket, page IV/ 5) is recommended.

The version with C type process connection can be fitted directly to a 3- or 5-valve manifold. The factory-mounted transmitters with VM type valve manifold (page IV/ 2) are recommended. A transmitter without a valve manifold can be fitted in any position on a 2″ pipe or on a wall using the C-2″ mounting bracket (page IV/ 5).

When the special process connections are required for the measurement of levels and pressures (e.g. at food and chemical industries), the transmitter is provided with an Aplisens diaphragm seal. The differential pressure transmitters with diaphragm seals are described in detail in the further part of the catalogue.

Technical data

Materials:	Wetted parts:	SS316L
	Casing	SS304 (Option: SS316)

Hysteresis, repeatability	0,05%
Thermal compensation range:	0÷70°C
Operating temperature range:	-25÷80°C
Medium temperature range:	-25÷120°C (direct measurement) Over 120°C – measurement with use an impulse line or diaphragm seals

CAUTION: the medium must not be allowed to freeze in the impulse line or close to the process connection of the transmitter.

Technical data

Any measuring range 0...16 mbar ÷ 0...25 bar

	Measuring Range				
	25 mbar	**100 mbar**	**1 bar**	**2 bar**	**25 bar**
Overpressure Limit Static Pressure Limit (repeated, without hysteresis)	250 bar (option 413 bar) (40 bar for GP type process connection)				
Accuracy	0,4%	0,4%	0,25%		
Long term stability	0,6% / year	0,2% / year	0,1% / year		
Thermal error	Typically 0,6% / 10°C max 1% / 10°C	Typically 0,3% / 10°C max 0,4% / 10°C	Typically 0,2% / 10°C max 0,3% / 10°C		
Zero shift error for static pressure*	0,1% / 10 bar				

* Zeroing the transmitter in conditions of static pressure can eliminate this error.

Output signal 4...20 mA, two wire transmission
0…10 V, three wire transmission

Load resistance (for current output) $R[\Omega] \le \frac{U_{sup}[V]-85V}{0{,}02A}$

Load resistance (for supply output) $R \ge 20k\Omega$

Power supply

output 4..20 mA: 8…36 VDC (Ex 9...28 VDC)
version TR: 10,5…36 VDC (Ex 12...28 VDC)

output 0..10 V: 13…30 VDC

Error due to supply voltage changes 0,005% (FSO) / V

Ordering procedure

Model	Code	Description
PRE-28		Differential pressure transmitter
Versions, certificates	/Exia……..... Ex: II 1/2G Ex ia IIC T4/T5/T6 Ga/Gb; II 1D Ex ia IIIC T110°C Da; I M1 Ex ia I Ma IECEx: Ex ia IIC T4/T5/T6 Ga/Gb; Ex ia IIIC T110°C Da; Ex ia I Ma	Only for transmitters with 4…20mA output For PM12, PKD version: Ex: II 1/2G Ex ia IIC T4/T5/T6 Ga/Gb IECEx: Ex ia IIC T4/T5/T6 Ga/Gb For ALW, ALM version: Ex: II 1/2G Ex ia IIC T4 Ga/Gb; II 1D Ex ia IIIC T110°C Da IECEx: Ex ia IIC T4 Ga/Gb; Ex ia IIIC T110°C Da
more than one option is available	/MR…….....……. /TIen…….....…….....……. /TR……. /NACE…….	Marine certificate – DNV, BV (not available in ALW and ALM version) For oxygen service (sensor filled with Fluorolube fluid) Response time <30ms; only 4..20mA output NACE MR-01-75 certificate (process connections: C)
Measuring range	/…÷… [required units]	Measuring range in relation to 4mA and 20mA (or 0 and 10V) output.
Analogue output signal	*(without marking)* /0÷10V….....	4...20mA / power supply 10,5...36VDC (Ex 12…28VDC) 0...10VDC /power supply 13...30VDC
Measuring set range	/…÷… [required units]	Calibrated range in relation to 4mA and 20mA (or 0V and 10V) output
Casing, electrical connection	/PD…… /PM12…… /PKD…… /ALW…….. /ALM……..	Housing IP65 with DIN EN 175301-803 connector 304SS housing, IP67 with thread M12x1 304SS housing, IP67, cable electrical connection (3 m of cable in standard) Aluminum housing, local display, IP65, DIN43650 connector (4…20mA version only) Aluminum housing, local display, IP65, DIN43650 connector (4…20mA version only)
Process connections	/C…..... /CH…… /GP..... /PN..... /code of diaphragm seal….	Thread 1/4NPT F on the cover flanges cover flanges material SS316. Allows mounting with a valve manifold. Process connection of cover flange: M10 (option /C(7/16) - 7/16"UNF acc. to IEC 61518), wetted parts material: SS316L C-type process connection rotated 90° Thread G1/2" (male), wetted parts material: SS316L Thread 1/4"NPT (female), wetted parts material: SS316L Diaphragm seal (see chapter of diaphragm seals) mounted on Hi side of transmitter, Lo side 1/4NPT Female
Gasket (refers only to C, CH process connection)	(without marking)..... /NBR..... /PTFE……	FPM Viton NBR PTFE
Accessories	/C-2"……..... /C-2"(SS)……..... /C-2"(SS316)……..... /C-2"B..... /C-2"B(SS)……..... /C-2"B(SS316)…… /FI25……..…….. /RedSpaw GP…… /RedSpaw C…… /Red d/P 1/2"……..	Mounting bracket for 2" pipe (to C process conn.), mat. zinced steel Mounting bracket for 2" pipe (to C process conn.), mat. ss304 Mounting bracket for 2" pipe (to C process conn.), mat. ss316 Mounting bracket for 2" pipe (to C(7/16) process conn.), mat. zinced steel Mounting bracket for 2" pipe (to C(7/16) process conn.), mat. ss304 Mounting bracket for 2" pipe (to C(7/16) process conn.), mat. ss316 Mounting bracket for 1" pipe (to P process conn.), mat. Stainless Steel Connector to weld impulse pipes dia. 12 and 14 mm, material 15HM(SO) or SS316(S). Only process connection GP type Connector to weld impulse pipes dia. 12 and 14 mm, material 15HM. Only process connection C type. Adapter for differential pressure transmitters with C type process connection, output thread 1/2NPT F. Material SS316L
Other specification	/.....	Description of required parameters

Differential pressure transmitter AS-dP

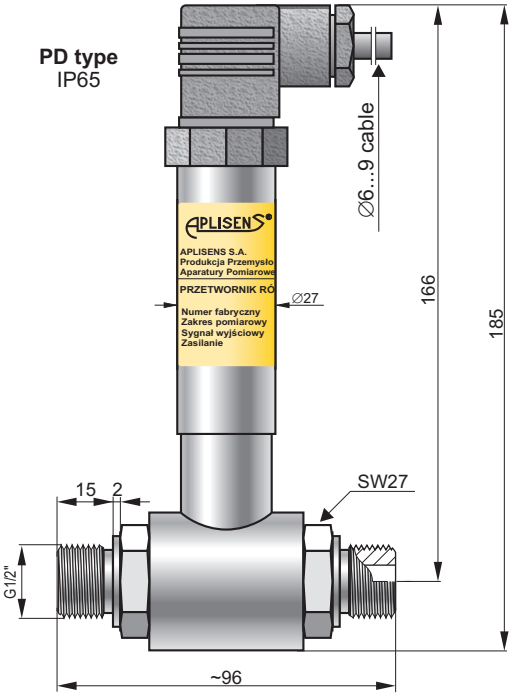

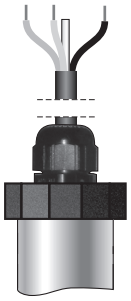

PKD type
IP67
(3m of cable in standard)

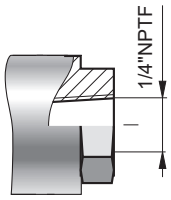

- ✓ **Accuracy 0.4%**
- ✓ **Measuring ranges:**
  0 ÷ 1, 0 ÷ 2.5, 0 ÷ 4 bar
  0 ÷ 6, 0 ÷ 10 bar
  0 ÷ 16, 0 ÷ 25 bar
- ✓ **Output signal: 4 ÷ 20 mA**
- ✓ **Process connection:**
  G1/2", 1/4"NPTF

Metrological parameters

Accuracy	0,4%
Hysteresis, repeatability	0,05%
Overpressure limit	6 × range max. 40 bar
Thermal compensation range	0 ÷ 70°C
Thermal error	0,2% / 10°C
Long – term stability	0,5% / year

Electrical parameters

Output signal	4 ÷ 20 mA, two wire transmission
Power supply	8...36 VDC

Load resistance (for current output) $R[\Omega] \leq \frac{U_{sup}[V] - 8V}{0{,}02A}$

Load resistance (for supply output) $R \geq 20k\Omega$

Technical data

Degree of protection	IP65
Material of process connection and diaphragms	00H17N14M2 (316 Lss)
Material of casing	0H18N9 (304ss)

Operating conditions

Operating temperature range (ambient temp.)	–25 ÷ 80°C
Medium temperature range	–25 ÷ 120°C – direct measurement > 120°C – measurement using an impulse line

Ordering procedure

AS-dP /___/___/___/___

Measuring range:
0÷1, 0÷2.5, 0÷4, 0÷6, 0÷10, 0÷16 or **0÷25 bar**

Electrical connection:
PD or **PKD**

Output signal:
4 ÷ 20 mA

Process connection:
GP or **1/4"NPTF**

DIFFERENTIAL PRESSURE TRANSMITTER for low ranges PRE-50G

- ✓ **Measuring range start from 250Pa**
- ✓ **Output signal: 4-20mA, 0-10V**

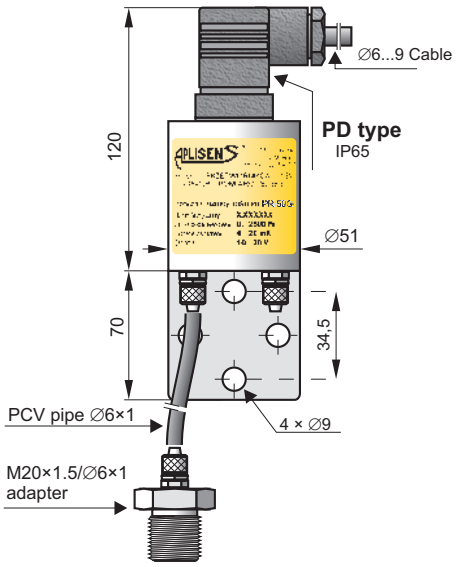

PRE-50G Economic Version, process connection with terminal connecting to ∅6 pipe (**PCV type**) An example with **PD type** Electrical Connection

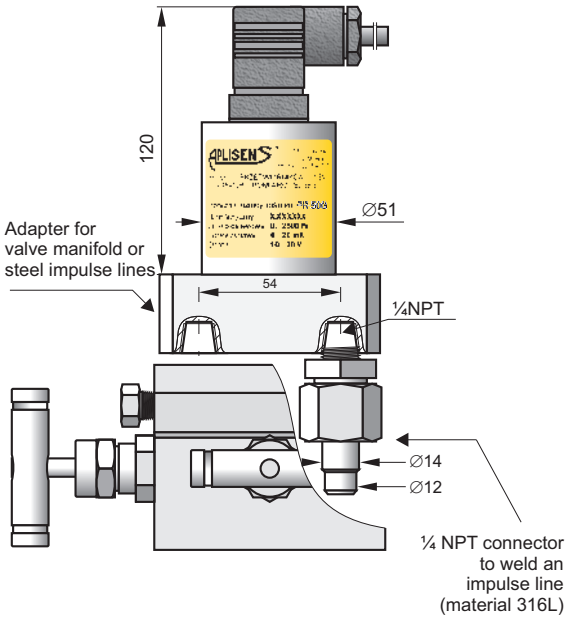

PRE-50G Industrial Version, **C type** process Connector to be mounted along with a valve manifold

Application

The PRE-50G transmitter is applicable to gases, to the measurements of their pressure, underpressure and differential pressure. Typical applications include the measurement of blast pressure, chimney draughts or pressure / underpressure in furnace chambers. IP protection IP65.

Installation

The economical version can be mounted on any stable construction using the assembly fixture with ∅9 opening. The transmitter's connection shanks have terminals to be connected to the elastic ∅6×1 impulse line. Where the pulse comes through a metal pipe, we suggest an M20×1.5 adapter for a ∅6×1 fitting using.

The transmitter with a C type connector should be mounted on a 3- or 5-valve manifold. We recommend to use our pre-assembled transmitters with VM type valves (page IV/ 2).

Technical data

Any measuring range 250 Pa ÷ 20 kPa

	Measuring range			
	250 Pa	**>250…700Pa**	**>700…2500 Pa**	**>2500 Pa**
Overpressure limit Static pressure limit (repeated – without histeresis)	35 kPa	35 kPa	100 kPa	100 kPa
Accuracy	1,6%	0,6%		0,3%
Thermal error 10°C	1%	0,6%	0,3%	

Histeresis, repeatability 0,05% to 0,25% depend on setting range

Thermal compensation range 5 ÷ 50°C

Operating temperature range -25 ÷ 80°C

Standard measuring range : 0...250; 0...500 Pa;

0...2; 0...5; 0...10 kPa;
-150...150; -250...250 Pa;
-0,5...0,5; -1...1; -2,5...2,5; -5...5; -10...10 kPa

Output signal 4 ÷ 20 mA two wire transmission
0 ÷ 10 V three wire transmission

Power supply 10…36 VDC two wire transmission
13…39 VDC three wire transmission

Error due to supply voltage changes 0,005% / V

Load resistance (for current output) $R[\Omega] \leq \frac{U_{sup}[V] - 10V}{0{,}02A}$

Load resistance (for supply output) $R \geq 20k\Omega$

Housing material 0H18N9 (SS304)

Adapters material C - SS316Ti
M20×1,5/∅6×1 – brass

Valve manifolds SS316

Ordering procedure

Model	Code	Description
PRE-50G		Differential pressure transmitter
Measuring set range	/…÷… [required units]	Calibrated range in relation to 4mA and 20mA (or 0V and 10V) output
Casing	/PD……	Housing IP65 with DIN EN 175301-803 connector
Process connections	/PCV.....	Process connection with terminal connecting for ∅6mm elastic pipe. Mounting bracket for wall mounting is a standard.
	/C.....	Thread 1/4NPT F on the cover flanges, diaphragms material SS316L, cover flanges material SS316. Allows mounting with a valve manifold.
Accessories	/M20x1,5/∅6.....	Adapter from ∅6mm elastic pipe for M20x1,5 M thread (only version with PCV process connection)
	/RedSpaw C……..	Connector to weld impulse pipes dia. 12 and 14 mm, material 15HM. (only version with process connection C type)
	/+VM-3/A……	Assembled with a 3-way valve manifold (further specification of manifold - see data sheet) . Only version with C type process connection.
	/+VM-5/A……	Assembled with a 5-way valve manifold (further specification of manifold - see data sheet) . Only version with C type process connection.
Other specification	/.....	Description of required parameters (e.g. non-standard pr. connection G3/4", M22x1,5)

Example: Differential pressure transmitter PRE-50G / range 0...1 kPa / output signal 4 ÷ 20 mA / process connection type PCV. adapter M20×1,5/∅6×1 X 2 pcs.

PRE-50G / 0 ÷ 1 kPa / 4 ÷ 20 mA / PCV /2x adapter M20×1,5/∅6×1

SMART DIFFERENTIAL PRESSURE TRANSMITTER WITH TWO DIAPHRAGM SEALS MODEL APR-2000ALW (former APR-2200ALW)

SIL2/SIL3 safety version

- ✓ 4...20 mA output signal + HART 5 / HART 7 protocol
- ✓ Accuracy 0,1%
- ✓ Safety version SIL2/SIL3
- ✓ Intrinsic safety certificate ATEX, IECEx, FM (USA, Canada)
- ✓ Explosion proof certificate ATEX, IECEx, FM (USA, Canada)
- ✓ Fully welded sensor guarantees tightness of oil system for many years
- ✓ Ability to configure measuring range locally

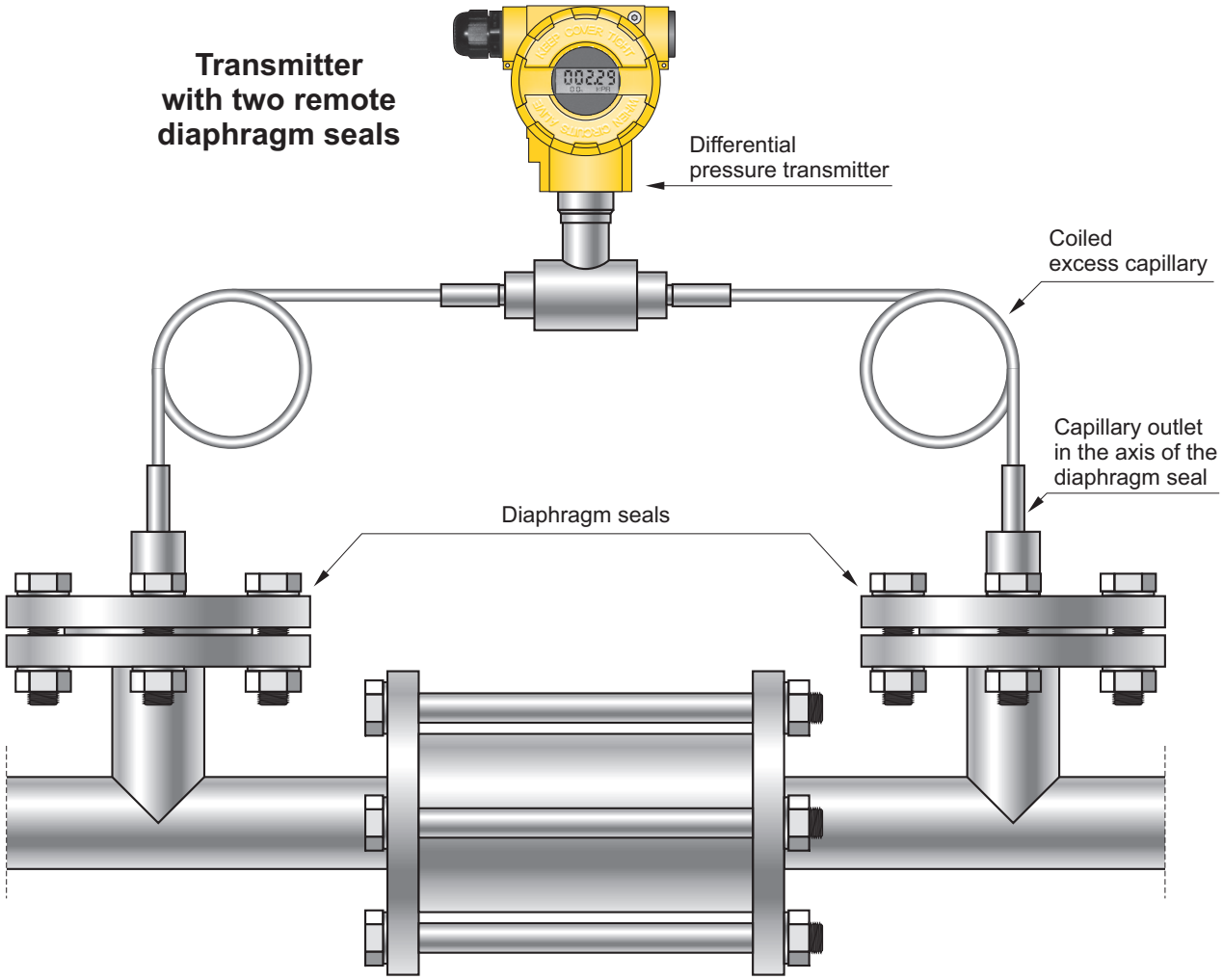

Example of a filter loss measurement

Recommendations

The version of the transmitter with two remote diaphragm seals is recommended for the measurement of pressure differences when the hydrostatic pressure of the manometric fluid in the capillaries (which depends on the vertical spacing of the seals) is significantly less than the measuring range of the transmitter. The best metrological results are obtained when the applied capillaries are identical, as short as possible, and terminated with identical seals. At such a configuration additional temperature errors, related to the remote sealing, affect both of the measurement chambers of the differential pressure transmitter in the same way, and thus cancel each other out.

Transmitter with two types of diaphragm seal: one – direct diaphragm seal and the other – remote diaphragm seal

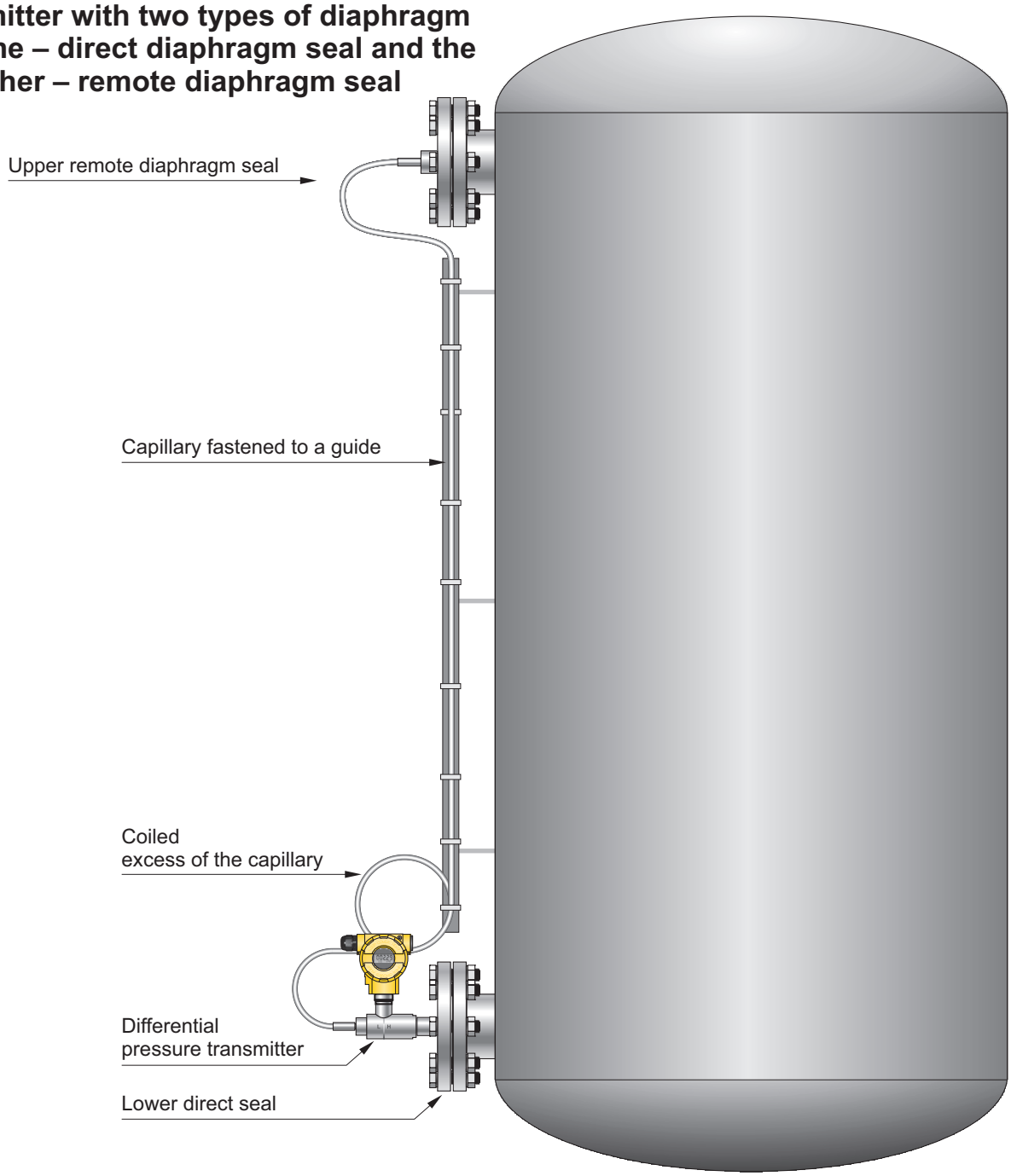

Example of measurement of the level in a pressure tank

Recommendations

The transmitter with a direct diaphragm seal (connected to the positive measurement chamber) and a remote diaphragm seal (connected to the negative chamber) is recommended for hydrostatic measurements of: levels, densities, phase boundaries and pressure differences (with differentiated height of pulse source points*).

In such a configuration, at ambient temperature changes, two opposite phenomena appear concurrently.

Thermal expansion causes the change in the volume (and hence also the change in density) of the manometric fluid in the capillary, which results in a change of the hydrostatic pressure related to the vertical spacing of the seals.

This phenomenon is counteracted by the elastic reaction of the diaphragm of the upper diaphragm seal, which is displaced by the change in volume of manometric fluid. Based on tests and experiments, the Aplisens transmitters are provided with carefully selected seal diaphragms, which guarantee compensation of the errors resulted from the ambient temperature changes.

The best metrological results are obtained using assembly, which include DN 80, DN 100, A 109 and S-Comp diaphragm seals or S-Mazut, S-DIN and S-Clamp diaphragm seals with a diameter of at least 65 mm, where the length of the capillary is (1...1.3) × (vertical spacing of seals). It is recommended using identical diaphragm seals at the both upper and lower connection points.

* The difference in height of pulse source points, at which the hydrostatic pressure of the manometric fluid is comparable to or greater than the range of the transmitter.

Example versions

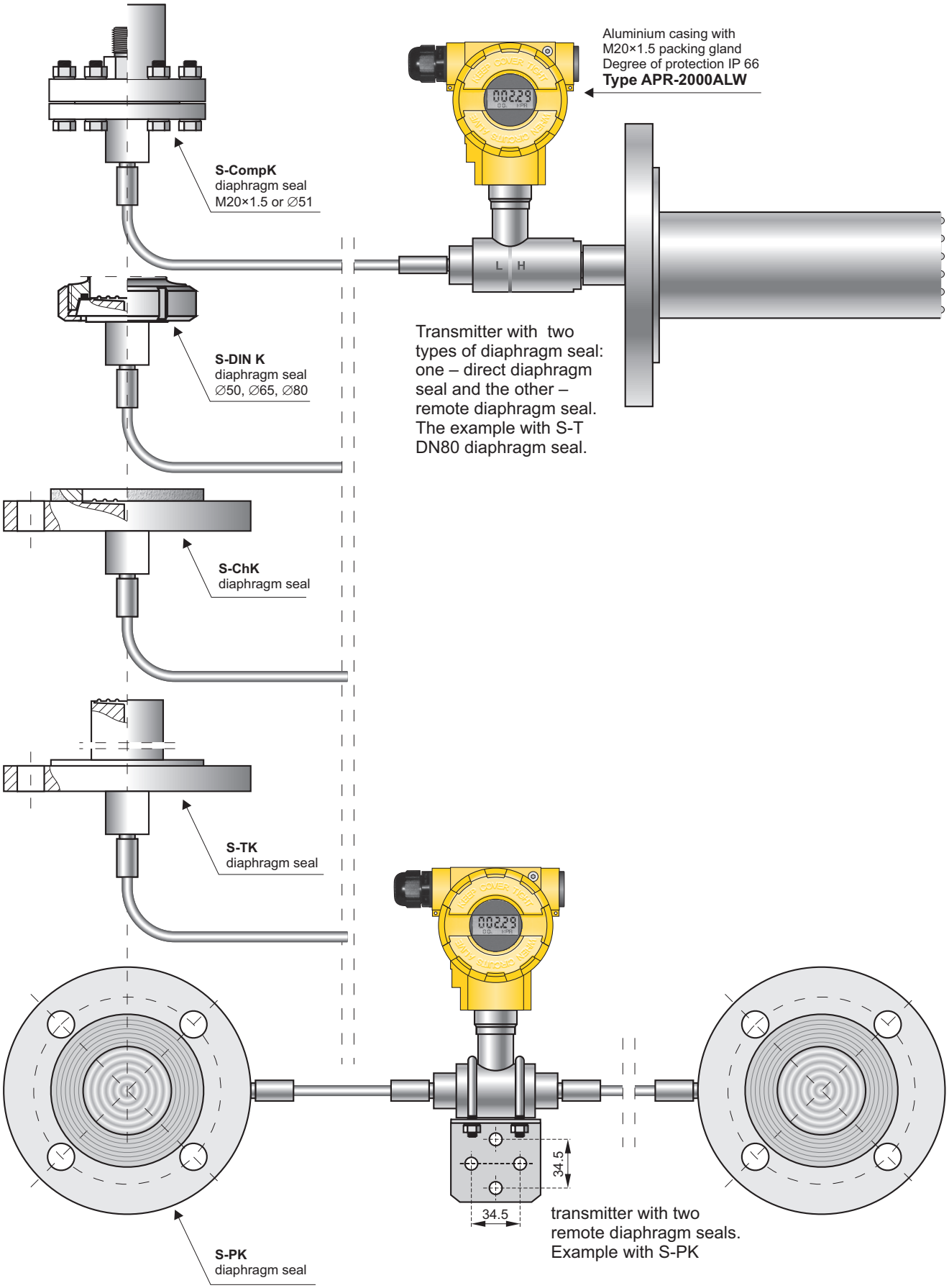

Note: The appropriate configuration of the complete set of pressure transmitter, diaphragm seals and capillaries, as well as the proper selection of manometric fluid, depends on several factors, including the physical and chemical properties, temperature range of the medium, the vertical spacing of the diaphragm seals, the measuring range, static pressure range, range of ambient temperatures and the technical specifications for mechanical connection of the diaphragm seals to the pressure devices.

Application and construction

The differential pressure transmitter is applicable to the measurement of pressure differences of: gases, vapours and liquids in cases where it is necessary to use seals and the pressure pulse source points may be several metres apart. Typical applications include the hydrostatic measurement of: levels in closed tanks, densities and phase boundaries, and the measurement of a filter loss, pressure differences between media in pasteurisers etc. The available range of the diaphragm seals allows measurement at great majority of media. The active element is a piezoresistant silicon sensor separated from the medium by a distance sealing system. The special design of the measuring unit means that it can withstand pressure surges and overloads of up to 40 bar. The electronic circuits are enclosed in a casing with a degree of protection IP 65 or IP66.

Configuration

The settings of the following metrological parameters can be changed:

- the units of pressure in which the range is configured,
- start and end points of the range, time constant,
- inverted characteristic (output signal 20 ÷ 4 mA).

Communication

The transmitter is configured and calibrated using a KAP-03 communicator, some other communicators (HART) or a PC using an HART/USB converter and Aplisens RAPORT 2 configuration software.

The data interchange with the transmitter enables the users the transmitter identification, as well as reading of the currently measured differential pressure value, output current and percent of range width.

Measuring ranges

Nominal measuring range (FSO)	Minimum set range	Vertical spacing of diaphragm seals	Maximum set range width, considering the actual vertical spacing of the diaphragm seals (m)	Static pressure limit
-160…160 mbar	0,1 m H_2O	≤ 1,7 m	[1,6 + (vertical spacing of seals × 0,94)] m H_2O	40 bar
-0,5…0.5 bar	0,5 m H_2O	≤ 6 m	[5 + (vertical spacing of seals × 1,04)] m H_2O	40 bar
-1,6…2 bar	1,5 m H_2O	≤ 15 m	[20 + (vertical spacing of seals × 1,04)] m H_2O	40 bar
-1,6…16 bar	1 bar	≤ 15 m	16 bar	40 bar

CAUTION: The maximum vertical diaphragm seal spacing shown in the table applies to level measurement, ensuring that it is possible to set the zero point of the transmitter when the tank is empty. For measurements of density or phase boundaries (in the sugar, chemical or refinery industries) the vertical spacing of the diaphragm seals can be larger.

Metrological parameters

Accuracy ≤ ±0.1% (FSO)

The other parameters as given in the sheet for the smart differential pressure transmitter APR-2000ALW.

Sealing effect errors – as given in the relevant diaphragm seal sheet in chapter III (Diaphragm Seals), concerning the distance seal.

NOTE: The additional absolute zero error due to ambient temperature can be compensated by configuring the transmitter, seals and capillaries in accordance with the recommendations on pages II/ 20 and II/ 21.

Electrical parameters

As given in the sheet for the APR-2000ALW differential pressure transmitter.

Operating conditions

Operating temperature range (ambient temperature) -25...85°C
Exia, IS version: -25...80°C
Exd, XP version: -25...75°C

Medium temperature range – as given in the appropriate diaphragm seal sheet (remote seal)

Ordering procedure

Model	Code	Description
APR-2000		Smart differential pressure transmitter
Versions	/ALW……..……..….	With display, output 4-20mA + Hart
	/ALW/Safety.....	With display, output 4-20mA + Hart Functional Safety certificate according to PN-EN 61508:2010 parts 1 ÷ 7, PN-EN 61511-1:2017 + PN-EN 61511-1:2017/A1:2018-03, PN-EN 62061:2008 + PN-EN 62061:2008/A1:2013-06 + PN-EN 62061:2008/A2:2016-01
Certificates, options *	/SS……..	Stainless steel housing
	/Exia……....	II 1/2G Ex ia IIC T4/T5 Ga/Gb IECEx Ex ia IIC T4/T5 Ga/Gb
	/Exia (Da)……...	II 1/2G Ex ia IIC T4/T5 Ga/Gb II 1D Ex ia IIIC T105°C Da I M1 Ex ia I Ma (version with SS housing) Ex ia IIC T4/T5 Ga/Gb IECEx Ex ia IIIC T105°C Da Ex ia I Ma (version with SS housing)
	/IS……	IS Class I, Div 1, Groups A, B, C, D T4 IS Class II, Div 1, Groups E, F, G T5 IS Class III, Div 1, T5 Zone 0 AEx/Ex ia IIC T4 Ga Zone 20 AEx/Ex ia IIIC T105°C Da
	/Exd……..	II 1/2G Ex ia/db IIC T6/T5 Ga/Gb II 1/2D Ex ia/tb IIIC T85°C/T100°C Da/Db I M2 Exd ia I Mb (version with SS housing) Ex ia/db IIC T6/T5 Ga/Gb IECEx Ex ia/tb IIIC T105°C Da/Db Ex db ia I Mb (version with SS housing) Packing gland available on request
	/Exd (2G)……	II 2G Ex ia/db IIC T6/T5 Gb II 2D Ex ia/tb IIIC T105°C Db IECEx Ex ia/db IIC T6/T5 Gb Ex ia/t IIIC T105°C Db Packing gland available on request
	/XP……....	XP Class I, Div 1, Groups A, B, C, D T5 DIP Class II, Div 1, Groups E, F, G T5 DIP Class III, Div 1, T5 Zone 1 AEx db ia IIC T5 Gb Zone 21 AEx ia tb IIIC T105°C Db Packing gland available on request
	/XPC……	XP Class I, Div 1, Groups B, C, D T5 DIP Class II, Div 1, Groups E, F, G T5 DIP Class III, Div 1, T5 Zone 1 AEx/Ex db ia IIC T5 Gb Zone 21 AEx/Ex ia tb IIIC T105°C Db Packing gland available on request
	/Exia(Da)/Exd……	Dual certification Exia(Da) and Exd
	/Exia(Da)/Exd(2G)……	Dual certification Exia(Da) and Exd(2G)
	/IS/XP……....	Dual certification IS and XP for US
	/IS/XPC……....	Dual certification IS and XPC for US and Canada
	/SA……....	Surge arrester for Exia version
	/100 bar.....	Static pressure 100 bar
*- more than one option is available	/250 bar.....	Static pressure 250 bar
	/IP67……...	Protection class IP67
	/Hart 7……	Communication protocol HART in revision 7

		Range	Min. set range
Nominal measuring range	/-160÷160 mbar.....	-160÷160 mbar (-16÷16 kPa)	0,1 mH2O
	/-0,5÷0,5 bar.....	-0,5÷0,5 bar (-50÷50 kPa)	0,5 mH2O
	/-1,6÷2 bar.....	-1,6÷2 bar (-160÷200 kPa)	1,5 mH2O
	/-1,6÷16 bar.....	-1,6÷16 bar (-160÷1600 kPa)	1 bar

Measuring set range	/…÷… [required units]	Calibrated range in relation to 4mA and 20mA output
Process connections	/(+)……..	Direct diaphragm seal or remote diaphragm seal mounted on the (+) side of the transmitter- code as given in the relevant diaphragm seal sheet
	K=……...	Capillary length on (+) side of transmitter
	/(-)……..	Remote diaphragm seal mounted on the (-) side of the transmitter – code as given in the relevant diaphragm seal sheet
	K=……...	Capillary length on (-) side of transmitter
Electrical connection	(without marking)	Packing gland M20x1,5
	/US.....	Thread 1/2"NPT Female
Accessories	/FI25…….	Mounting bracket for 1" pipe, mat. Stainless Steel
Other specification	/.....	Description of required parameters

Standard display configuration

	Std. version	Exia, Exia(Da), IS	Exd, XP	Exia(Da)/Exd, IS/XP	Safety
Backlight on	•	•	•		
Backlight off				•	•

Other configuration of display has to be marked upon placing order. User has no possibility of switching backlight on/off.

To simplify the mathematical operations we introduce the density coefficient of the medium **X**ρ.

$$X\rho = \frac{\rho_{medium}\ [g/cm^3]}{\rho_{water\ at\ 4°C}\ [g/cm^3]}$$

Since the density of water at 4°C is 1 g/cm³, the **density coefficient Xρ is numerically equal to the density of the medium expressed in g/cm³**. To determine the hydrostatic pressure of a column of liquid in mm H_2O, it is sufficient to multiply the height of the column h [mm] by the density coefficient of the liquid Xρ. Since it is easy to determine the hydrostatic pressure in mm H_2O and the transmitter can be configured in those units, in the descriptions of measurement methods given below we will make use of pressures expressed in mm H_2O and the density coefficient Xρ.

Configuration of the transmitter to measure the level of liquid in a tank

The measurement task:
To convert a variation in the level of a liquid with density ρ = 0.87 g/cm³ between 0 and h_{max} to a variation in the output signal from 4 to 20 mA.

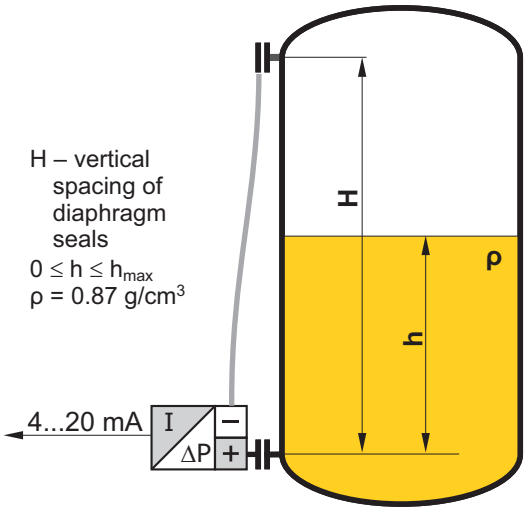

1. Install the transmitter in its working position on an empty tank.
2. Make the electrical connections of the transmitter, providing for the ability to use HART communication.
3. Connect the KAP-03 communicator, identify the transmitter and select the "configuration" function.
4. On the configuration menu select the "Reranging" procedure.
5. On the "Reranging" menu:
   a) change the units of measurement to mm H_2O at 4°C;
   b) enter the values for the start (Xń × h_{min} [mm]) and end (Xρ × h_{max} [mm]) of the measurement range, namely 0 and (0.87 h_{max} [mm]) respectively;
   c) to compensate for the hydrostatic pressure of the manometric fluid, the start of the measurement range should be set using regulated pressure; when subject to the action of only the manometric fluid (empty tank) the transmitter will shift the start and end-points of the range, compensating for the value of that pressure.

When the transmitter has been configured in this way it is ready to be used to carry out the given measurement task.

If it is not possible to empty the tank to configure the transmitter, the hydrostatic pressure of the manometric fluid should be calculated by multiplying the vertical spacing of the diaphragm seals by the density coefficient of the oil in the capillaries. This pressure should be taken into account when entering the values for the start and end of the range:

Start [mm H_2O] = –H [mm] × $X\rho_{oil}$

End [mm H_2O] =
= h_{max} [mm] × $X\rho_{measured\ liquid}$ – H [mm] × $X\rho_{oil}$

ρ_{oil} for DC-550 oil is equal to 1.068 g/cm³
ρ_{oil} for AK-20 oil is equal to 0.945 g/cm³

Configuration of the transmitter to measure density of liquids

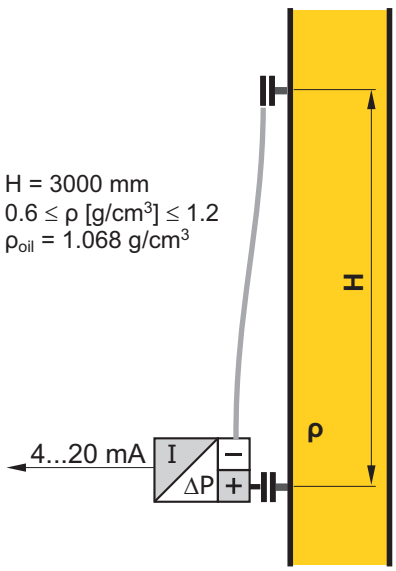

The measurement task:
To convert a variation in liquid density from ρ_{min} = 0.6 g/cm³ to ρ_{max} = 1.2 g/cm³ to a variation in the output signal from 4 to 20 mA, with the vertical spacing of the diaphragm seals equal to H = 3000 mm. The sealing system is filled with DC-550 oil with density ρ_{oil} = 1.068 g/cm³.

1. Calculate the value of the start of the range as follows:
   $H_{[mm]} \times (X\rho_{min} - X\rho_{oil}) =$
   = 3000 × (0.6 – 1.068) = –1404 [mm H_2O]
2. Calculate the value of the end of the range as follows:
   $H_{[mm]} \times (X\rho_{max} - X\rho_{oil}) =$
   = 3000 × (1.2 – 1.068) = 396 [mm H_2O]
3. Set the zero point of the transmitter with the diaphragm seals positioned at the same level.
4. Install the transmitter in its working position.
5. Make the electrical connections to the transmitter, providing for the possibility of using HART communication.

6. Connect the KAP-03 communicator, identify the transmitter and select the “configuration” function.
7. On the configuration menu select “Reranging” procedure.
8. On the “Reranging” menu:
   a) change the measurement units to mm H_2O at 4°C;
   b) enter the calculated values for the start (–1404) and end (396) of the range.

When the transmitter has been configured in this way it is ready to be used to carry out the given measurement task.

Note: If it is possible to fill the space between the seals with a liquid whose density corresponds to the start of the measurement range, the start of the range of the transmitter can be set using regulated pressure.

Measurement of phase boundary

The height of the phase boundary of liquids of different densities is determined by measuring the average density of the medium between the seals.

Example:
Calculate the measurement range start and end points for an APR-2000/ALW transmitter configured to measure phase boundary height in the range 0–1000 mm between liquids of density $\rho_1 = 0.7$ g/cm^3 and $\rho_2 = 1.0$ g/cm^3, where the vertical spacing of the seals H = 1600 mm. The sealing system uses DC-550 oil with a density of 1.068 g/cm^3.

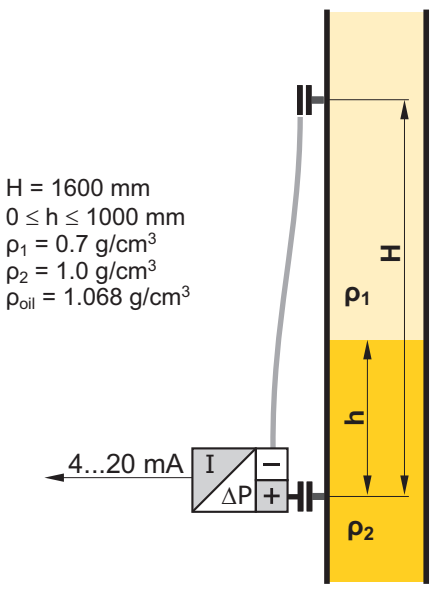

To determine the start of the measurement range, calculate the pressure difference at the transmitter when the tank is filled with the lighter liquid only:

$$1600\ [\text{mm}] \times (0.7 - 1.068) = -588.8\ [\text{mm } H_2O]$$

To determine the end-point of the range, add the increase in pressure resulting from the appearance of a 1 metre column of the heavier liquid:

$$-588.8\ [\text{mm } H_2O] + (1.0 - 0.7) \times 1000\ [\text{mm}] = -288.8\ [\text{mm } H_2O]$$

Additional remarks

The settings of the transmitter can be adjusted with reference to laboratory results from density measurements carried out on samples of the liquid being measured. This is most often necessary when the measurement takes place in a pipeline segment where the flow velocity of the measured liquid reaches several m/s.

Increasing the vertical spacing of the diaphragm seals widens the range and often improves measurement accuracy.

In planning the spacing of the diaphragm seals, ensure that the pressure difference at the transmitter lies within the basic range.

The maximum vertical spacing of the diaphragm seals (H) depends on the transmitter’s basic range and the boundary values for the density of the measured liquid (ρ_{min}; ρ_{max}).

If $\rho_{min} < \rho_{oil} < \rho_{max}$, the seal spacing H should satisfy the following conditions:

$$H\ [\text{mm}] \le \frac{\text{lower boundary of range [mm } H_2O]}{X\rho_{min} - X\rho_{oil}}$$

$$H\ [\text{mm}] \le \frac{\text{upper boundary of range [mm } H_2O]}{X\rho_{max} - X\rho_{oil}}$$

Example:
Determine the maximum vertical spacing of the seals for the **APR-2000ALW/-10...10 kPa** transmitter when measuring the density of liquid between 0.6 and 1.2 g/cm^3. The sealing system uses AK-20 silicone oil with a density of 0.945 g/cm^3.

The lower boundary of the range of the transmitter is –10 kPa = –1020 mm H_2O

$$H\ [\text{mm}] \le \frac{-1020}{0.6 - 0.945} \Rightarrow H\ [\text{mm}] \le \frac{-1020}{-0.345} \Rightarrow$$
$$H\ [\text{mm}] \le 2957$$

The upper boundary of the range of the transmitter is +10 kPa = 1020 mm H_2O

$$H\ [\text{mm}] \le \frac{1020}{1.2 - 0.945} \Rightarrow H\ [\text{mm}] \le \frac{1020}{0.255} \Rightarrow$$
$$H\ [\text{mm}] \le 4000$$

In the example, both conditions are satisfied when the spacing of the seals is not more than 2957 mm.

Smart electronic differential pressure transmitter APM-2

- ✓ **Measurement of differential pressure based on two absolute pressure transmitters**
- ✓ **Applicable in measurement of level in pressure tanks**
- ✓ **Modular construction with posibility of replacing of each module of the measuring system**
- ✓ **Output signal 4 ÷ 20 mA + HART**
- ✓ **Accuracy 0,1%**
- ✓ **Intrinsic safe and explosion proof version**

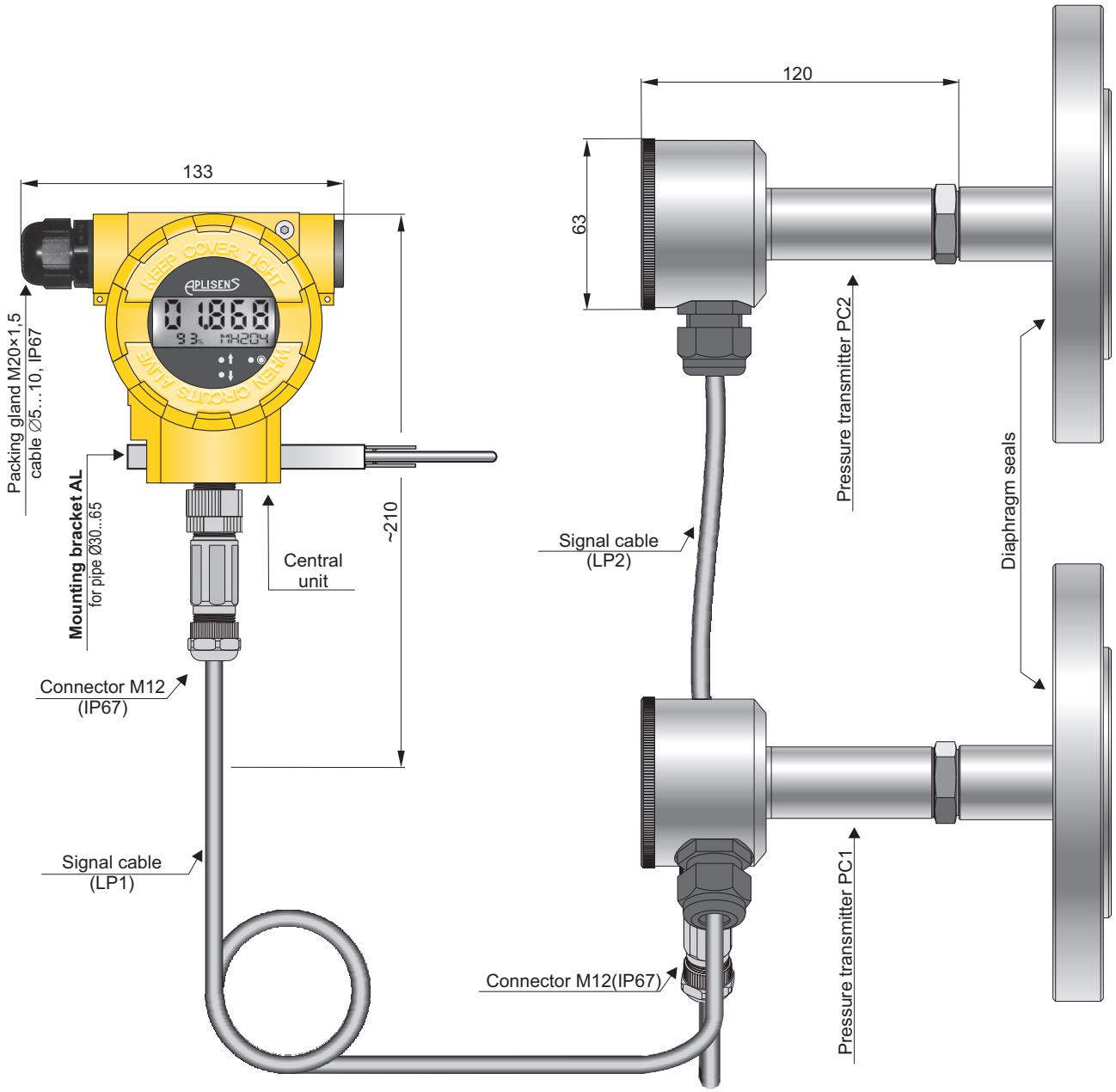

Application and construction

Modular electronic differential pressure transmitter APM-2 is applicable to hydrostatic measure of level in closed tanks, density or phase boundary.
The measuring system consists of 3 separate modules – central unit and two absolute pressure transmitters. Level is calculated in central unit basing on measurement from two pressure transmitters. High pressure transmitter measures hydrostatic pressure of liquid in tank, low pressure transmitter measures pressure of gases above the liquid. Differential pressure is calculated in the central unit. With default settings of central unit function of high pressure transmitter is designed for transmitter directly connected with central unit (PC1). User can change this assignment to second transmitter by changing configuration in central unit in local menu or via HART protocol. Measuring points can be several dozen meters apart.
The casing of central units is made of aluminium alloy cast or stainless steel with degree of protection IP66 or IP67 equipped with local display and buttons for configuration.
Measuring element of each of absolute pressure transmitters is piezoresistant silicon sensor separated from the medium by diaphragm and manometric liquid. Process connection of absolute pressure transmitters can be diaphragm seal or threaded flush connection. By using diaphragm seals transmitters can be used for measurement of contaminated medium, medium with high viscosity, very hot or very cold medium or medium where sanitary process connection is needed.
Electronic units of pressure transmitters are closed in sealed stainless steel casings with degree of protection IP67.
All modules of measuring system are connected with electric cables (length of cables is specified by user).

This system is an alternative for differential pressure transmitter with two remote diaphragm seals connected with capillaries filed with silicon oil uses in measurement of level on closed tank. The advantage of APM-2 is modularity of measuring system. By using M12 connection in case of any malfunction user has possibility to replace each of tree modules. Furthermore measurement is free of additional errors caused on the temperature gradient in the oil-based diaphragm sealing system.
APM-2 transmitter gives not only information about differential pressure but also about static pressure and temperature (both transmitters and central unit)

Communication and configuration

The communication standard for data interchange with the transmitter is HART protocol. Communication with the transmitter is carried out with a PC computer using HART/USB converter and RAPORT 2 configuration software. There is also possibility of configuration with using buttons and local display.
The data interchange with transmitter enables user to:

- identify the transmitter;
- setting LRV and URV by numeric value or by given pressure;
- zeroing of differential pressure measurement;
- change of measurement units;
- change of conversion characteristic;
- change of display configuration;
- read of differential pressure, static pressure of each of transmitters, temperature of central unit and each of transmitters;
- read of output signal in mA or percentage of measuring range;
- change of assignation of high and low pressure transmitters (PC1 and PC2);
- reset to factory settings.

Technical data

Measuring ranges

No.	Nominal measuring range (FSO)	Minimum set range (differentia pressure)	Admissible overpressure for pressure transmitters PC1 and PC2 (without hysteresis)	Static pressure limit (depending on the set range of differentia pressure)	Measuring ranges of pressure transmitters PC1 and PC2
1	0…1 bar	100 mbar	10 bar	-0,9…1,4 bar for range 0…100 mbar -0,9…0,5 bar for range 0…1 bar	2,5 bar ABS

Mertological parameters

Accuracy	≤ ±0,1%
Long term stability (for the nominal measuring range)	≤ accuracy for 3 years
Thermal error (including errors from diaphragm seal)	< ±0,1% (FSO) / 10°C
Thermal compensation range	-25...80°C
Processing time (calculation cycle period)	0,5 s
Additional electronic damping	0...60 s (factory setting: 2 s)
Error due to supply voltage changes	0,002% (FSO) / V

Electrical parameters

Power supply (standard version)	13...55 V DC
Output signal	4 ÷ 20 mA +Hart 7
Load resistance	$R[\Omega] \leq \frac{U_{SUP.}[V]-13V}{0,0225A}$
Resistance required for communication	min 240 Ω

Operating conditions

Operating temperature range (ambient temp.)	-30...85°C
special version	-40...85°C
Maximum medium temperature	150°C
special version	200°C

Construction, materials

Wetted parts	acc. to diaphragm seal datasheets
Casing:	
central unit	Aluminium option: SS316
pressure transmitters	SS304
Ingress protection class	IP67

Ordering procedure

Model	Code	Description
APM-2		Smart modular differential pressure transmitters IP67, with display, output 4-20mA + Hart
Versions, certificates	/Exia……	Ex II 1/2G Ex ia IIC T4/T5 Ga/Gb **IECEx** Ex ia IIC T4/T5 Ga/Gb
	/Exd……	Ex II 1/2G Ex db ia IIC T4/T5 Ga/Gb **IECEx** Ex db ia IIC T4/T5 Ga/Gb
	/SS……	Stainless steel housing
	/-40°C……	Ambient temperature range -40…85°C (power supply 13,1…55 V DC)
	/200°C……	Maximum temperature of measured medium 200°C
Nominal measuring range	/0÷100 kPa……	0÷100 kPa
Measuring set range	/…÷… ……	Calibrated range in relation to 4mA and 20mA output
LP1 cable length	/LP1=….m……	Length of cable between central unit and pressure transmitter LP1
Process connection of PC1	/(PC1)……	Choose from the below: Threaded connection: GP, CG1” or CM30x2 or Diaphragm seal: according to Chapter III
LP2 cable length	/LP2=….m……	Length of cable between central unit and pressure transmitter LP2
Process connection of PC2	/(PC2)……	Choose from the below: Threaded connection: GP, CG1” or CM30x2 or Diaphragm seal: according to Chapter III

Chapter III
Diaphragm seals

Flanged seals with flush diaphragm S-P .....III/ 2

Flanged seals with extended diaphragm S-T
and S-TK-P with direct diaphragm
cleaning system .....III/ 4

Chemical flanged seals with flush diaphragm
S-Ch .....III/ 6

Threaded seals with large diaphragm
and separable mounting parts S-Comp .....III/ 8

Threaded chemical seal with large diaphragm
S-CompCh .....III/ 10

Threaded seals with large diaphragm S-Mazut .... III/ 11

Sanitary diaphragm seals.....III/ 12

Threaded seals with flush diaphragm
and radiator S-RC .....III/ 15

Flanged seals with extended diaphragm
and direct diaphragm cleaning system S-TK-P ....III/ 16

Flanged seals with flush diaphragm S-P

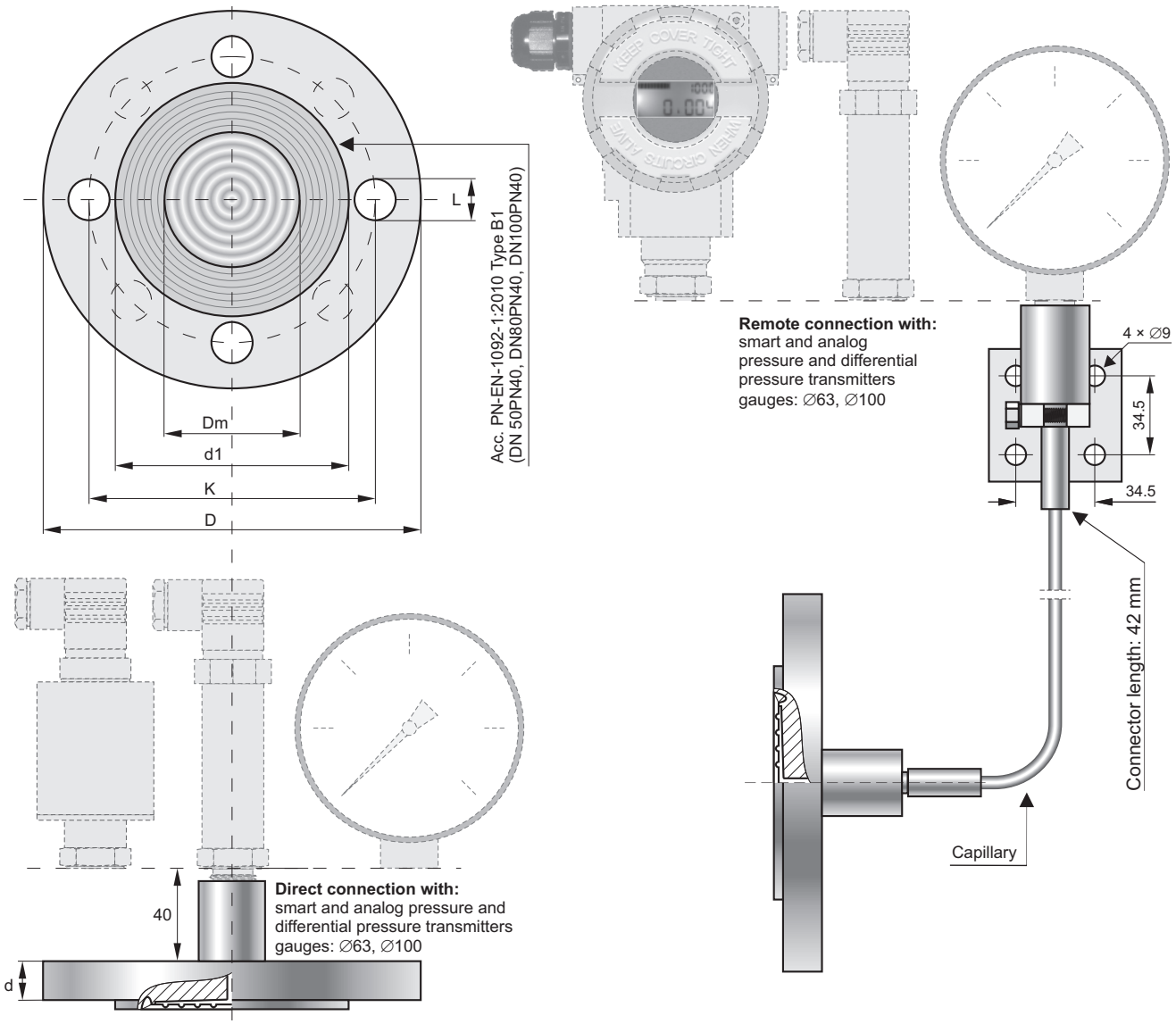

Diaphragm seal dimensions

Version	Diaphragm diameter **Dm**	Contact face diameter **d1**	Diameter of bolt circle **K**	External diameter **D**	Thickness **d**	Diameter of holes **L**	Number of holes
DN50 PN40/	59	102	125	165	22	18	4
2''ANSI 150	59	92	120,5	150	20	20	4
DN80 PN40	89	138	160	200	24	18	8
3'' ANSI 150	89	127	152,5	190	24	20	4
DN100 PN40	89	162	190	235	24	22	8
4'' ANSI 150	89	158	190,5	230	24	20	8

Application

The diaphragm seal is a pressure-transmitting, diaphragm-type device. The pressure signal is sent to the cooperating pressure measuring device (pressure transmitter, pressure gauge) through manometric liquid filling the space between the separating diaphragm of the seal and the pressure measuring device. The diaphragm seal task is to isolate the pressure measuring device from damaging impacts caused by either medium or installation:

- low or high temperature, increased viscosity, impurities;
- vibrations of the installation (remote diaphragm seal).

Recommended minimum measuring range (bar), depending on the type of the set: pressure measuring device - diaphragm seal

Pressure measuring device	Diaphragm seal type	Diaphragm seal version		
		DN50 / 2”	DN80 / 3”	DN100 / 4”
Smart transmitters*	direct	0.10	0.025	0.025
	remote (2 m)	1	0.25	0.25
PCE-28	direct	0.1	0.1	0.1
	remote (2 m)	1	0.25	0.25
∅63 gauge	direct	1	1	1
	remote (2 m)	2.5	1	1
∅100 gauge	direct	1	1	1
	remote (2 m)	2.5	1	1

* The ranges given in the table for the smart transmitters should be taken as set ranges.

Recommendations

The essential metrological problem at diaphragm seals operational use is an absolute thermal zero error, resulting from the thermal expansion of the manometer liquid. The expansion effect must be compensated for with the separating diaphragm flexibility.

To minimise this effect, it is advisable to:

– use capillaries as short as possible, in this way the volume of manometer liquid will be reduced (maximum capillary length for DN50 / 2” is 10m);
– use the greater diameter seals, in order to maximise the separating diaphragm flexibility;
– locate the capillaries in the places, in which the temperature fluctuations will be minimal.

Zero error from ambient temperature change

Diaphragm seal type	Absolute zero error per 10°C for the diaphragm seal		
	DN50 / 2”	DN80/ 3”	DN100 / 4”
direct	0.5 mbar	0.4 mbar	0.4 mbar
remote (2 m capillary)	3 mbar	1 mbar	1 mbar

An additional zero error, resulting from temperature fluctuations in a medium, depends on the temperature gradient in the oil-based diaphragm sealing system. The error value is, in any case, significantly smaller than the error value shown in the table.

Temperature range of measured medium

Remote diaphragm seal			Direct diaphragm seal
Manometric liquid	Underpressure measurements	Overpressure measurements	
very high temperature (DH)	max. 200°C for p > 0,05bar ABS max. 250°C for p > 0,1bar ABS	15...380°C	-30...150°C
high temperature (DC)		-10...315°C	
low temperature (AK)	not recommended for measurement of pressures < 0,2 bar ABS	-60...200°C	
Note: When operating with an ambient temperature of < 0°C, heating of capillaries filled with DC or DH fluid is recommended.			

Maximum pressure for PN40 – 40 bar

Maximum pressure for ANSI 150 – 150 psi

Material of diaphragm and flange: 316Lss

Important:
- standard outlet capillary from flange:
  direct mounted diaphragm seal - axial
  remote mounted diaphragm seal - axial
  other configuration avaliable on request

Special versions

- Other standard ANSI or DIN
- Filled with edible oil (medium temp. -10...150°C)
- Direct diaphragm seal for medium temp. over 150°C
- Others

Ordering procedure

direct diaphragm seal: **pressure measuring device / S-P – DN..... / spec. ver. (description)**

remote diaphragm seal: **pressure measuring device / S-PK – DN..... /K = ... m / ..... / ..... / spec. ver. (description)**

Transmitter or gauge – see the code in the appropriate catalogue sheet

Diaphragm seal version

Capillary length

Mounting of capillary:
AX - axial (standard version)
RD - radial (on request)

Type of manometric liquid:
DC (high-temperature)
AK (low-temperature)

Flanged seals with extended diaphragm S-T

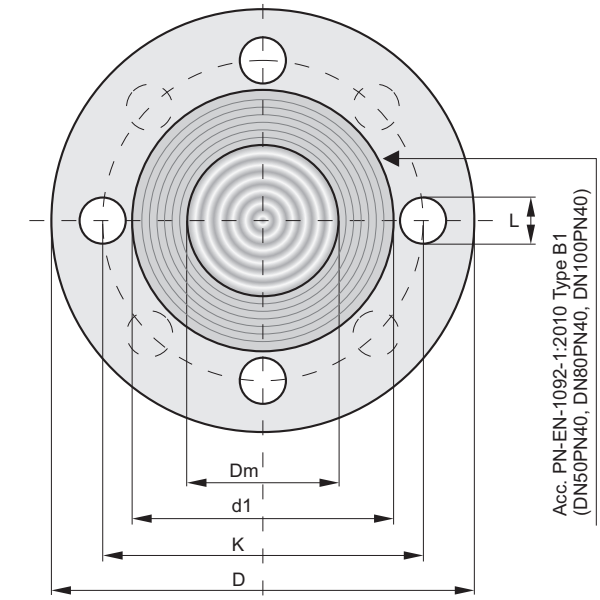

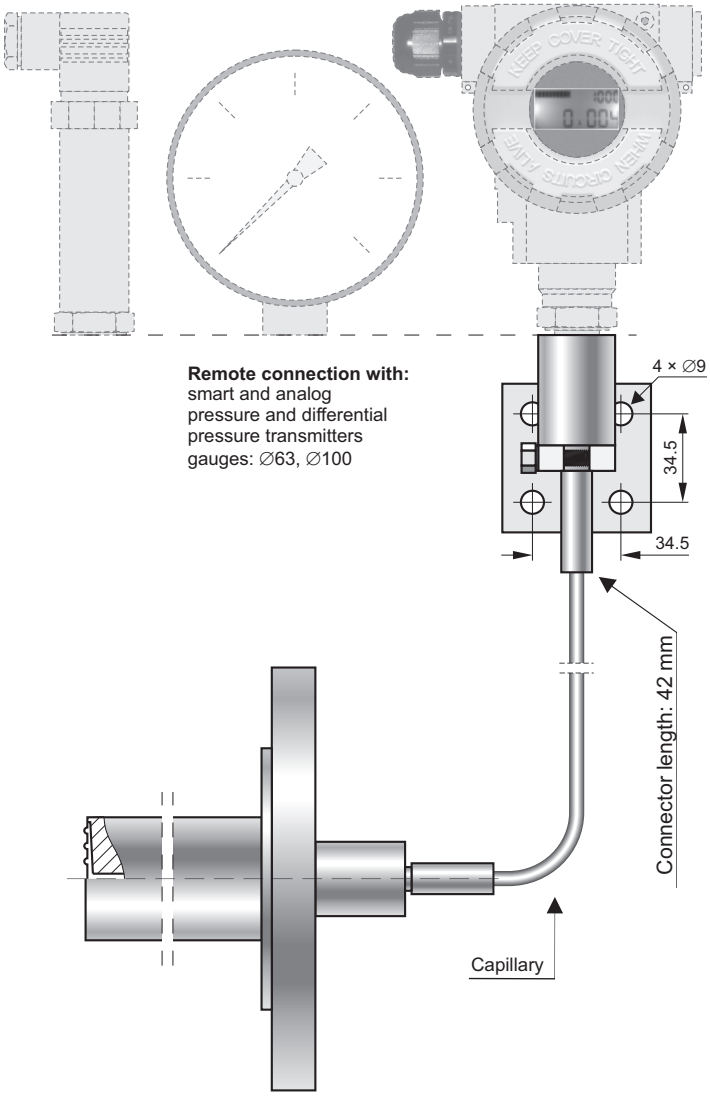

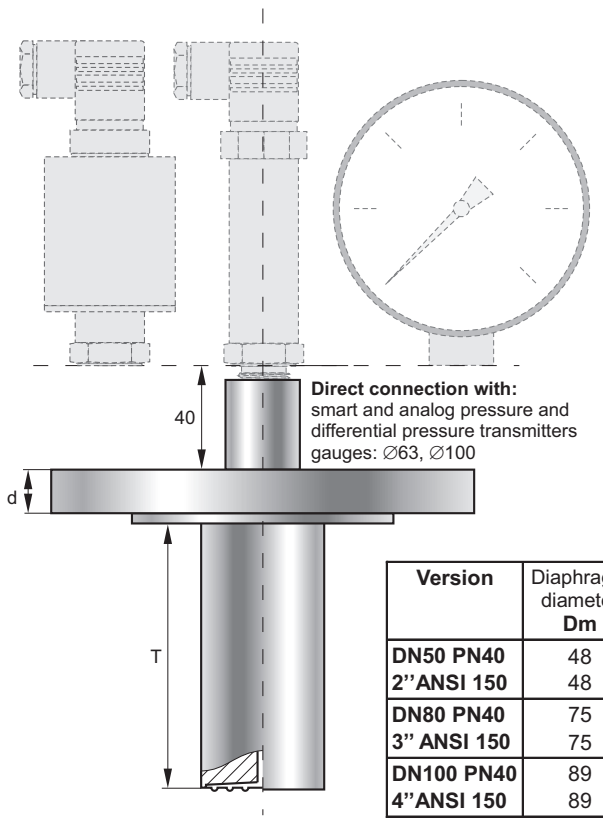

Diaphragm seal dimensions

Version	Diaphragm diameter **Dm**	Contact face diameter **d1**	Diameter of bolt circle **K**	External diameter **D**	Thick-ness **d**	Diameter of holes **L**	Number of holes	Tube length **T**
DN50 PN40	48	102	125	165	22	18	4	50, 100 150, 200
2''ANSI 150	48	92	120,5	150	20	20	4	
DN80 PN40	75	138	160	200	24	18	8	
3'' ANSI 150	75	127	152,5	190	24	20	4	
DN100 PN40	89	162	190	235	24	22	8	50, 100 150
4''ANSI 150	89	158	190,5	230	24	20	8	

Application

The diaphragm seal is a pressure-transmitting, diaphragm-type device. The pressure signal is sent to the cooperating pressure measuring device (pressure transmitter, pressure gauge) through manometric liquid filling the space between the separating diaphragm of the seal and the pressure measuring device. The diaphragm seal task is to isolate the pressure measuring device from damaging impacts caused by either medium or installation:

- low or high temperature, increased viscosity, impurities;
- tendency to crystallisation on the tank walls;
- vibrations of the installation (remote diaphragm seal).

The flanged diaphragm seal with extended diaphragm is typically applied to measure the pressure or level of the media in a multi-walled tank, where the separating diaphragm should be placed close to the inner wall of the tank.

Recommended minimum measuring range (bar), depending on the type of the set: pressure measuring device - diaphragm seal

Pressure measuring device	Seal type	Wykonanie separatora		
		DN50 / 2”	DN80 / 3”	DN100 / 4”
Smart transmitters*	direct	0,1	0.1	0.1
	remote (2 m)	6	0.5	0.25
PCE-28	direct	0.1	0.1	0.1
	remote (2 m)	2	0.5	2.5
∅63 manometer	direct	1	1	1
	remote (2 m)	2.5	2.5	1
∅100 manometer	direct	1	1	1
	remote (2 m)	2.5	2.5	1

* The ranges given in the table for smart transmitters should be taken as set ranges

Recommendations

The essential metrological problem at diaphragm seals operational use is an absolute thermal zero error, resulting from the thermal expansion of the manometer liquid. The expansion effect must be compensated for with the separating diaphragm flexibility.

To minimise this effect, it is advisable to:

– use capillaries as short as possible, in this way the volume of manometer liquid will be reduced
– (maximum capillary length for DN50 / 2” is 5m);
– use the greater diameter seals, in order to maximise the separating diaphragm flexibility;
– locate the capillaries in the places, in which the temperature fluctuations will be minimal.
–

Zero error from ambient temperature change - diaphragm seal with a 100 mm of tube

Diaphragm seal type	Absolute zero error per 10°C for the diaphragm seal		
	DN50 / 2”	DN80 / 3”	DN100 / 4”
direct	2 mbar	0.6 mbar	0.4 mbar
remote (2 m capillary)	10 mbar	2 mbar	1 mbar

An additional zero error, resulting from temperature fluctuations in a medium, depends on the temperature gradient in the oil-based diaphragm sealing system. The error value is, in any case, significantly smaller than the error value shown in the table.

Temperature range of measured medium

Remote diaphragm seal			Direct diaphragm seal
Manometric liquid	Underpressure measurements	Overpressure measurements	
very high temperature (DH)	max. 200°C for p > 0,05 bar ABS max. 250°C for p > 0,1 bar ABS	15...380°C	-30...150°C
high temperature (DC)		-10...315°C	
low temperature (AK)	not recommended for measurement of pressures < 0,2 bar ABS	-60...200°C	
Note: When operating with an ambient temperature of < 0°C, heating of capillaries filled with DC or DH fluid is recommended.			

Maximum pressure for PN40 – 40 bar
Maximum pressure for ANSI 150 – 150 psi
Material of diaphragm, tube and flange: 316Lss

Important:
- standard outlet capillary from flange:
  direct mounted diaphragm seal - axial
  remote mounted diaphragm seal - axial
  other configuration avaliable on request

Special versions

Other standards DIN and ANSI
Direct diaphragm seal for medium temp. over 150°C
Others

Ordering procedure

direct diaphragm seal:
pressure measuring device / S-T – DN..... / T = ... mm / spec. ver. (description)

remote diaphragm seal:
pressure measuring device / S-TK – DN..... / T = ... mm / K = ... m / ..... / spec. ver. (description)

Transmitter or gauge – see the code in the appropriate catalogue sheet

Seal version

Tube length

Capillary length

Mounting of capillary:
AX - axial (standard version)
RD - radial (on request)

Chemical flanged seals with flush diaphragm S-Ch

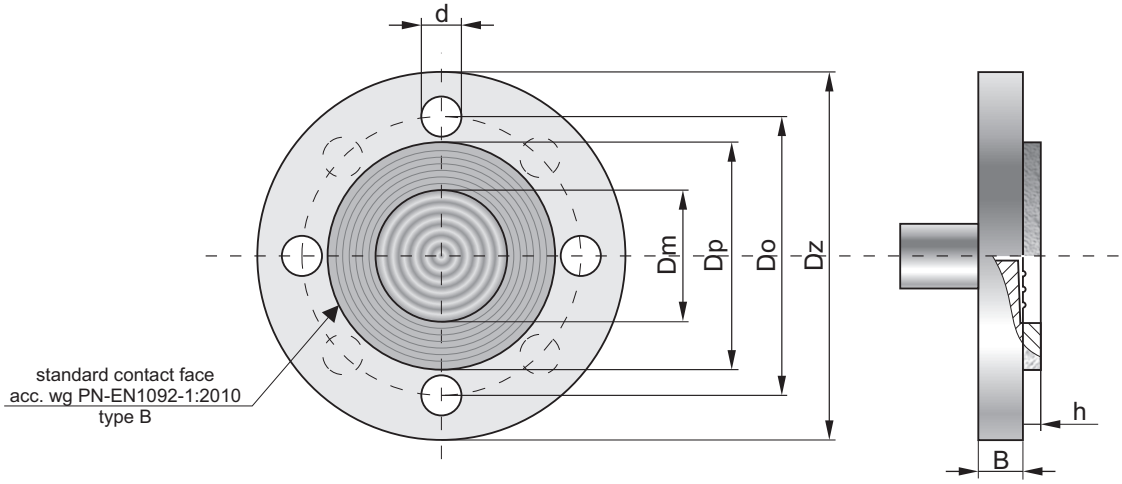

Diaphragm seal dimensions acc. to DIN EN1092-1

Material of wetted parts	Version	Diaphragm diameter **Dm**	Contact face dia. **Dp**	Dia. of bolt circle **Do**	External diameter **Dz**	Thickness **B**	Thickness **h**	Diameter of holes **d**	Number of holes
Hastelloy, Nickel, Monel	**DN50PN40**	59	98	125	165	18	7	18	4
	DN80PN40	89	132	160	200	22	7	18	8
Titanium	**DN50PN40**	59	98	125	165	24	6	18	4
	DN80PN40	89	138	160	200	22	6	18	8
Tantalum	**DN50PN40**	59	102	125	165	18	3	18	4
	DN80PN40	89	138	160	200	22	3	18	8
Tantalum/Teflon	**DN50PN16**	59	102	125	165	18	8	18	4
	DN80PN16	89	138	160	200	22	8	18	8
Teflon	**DN25PN16**	35	68	85	115	18	2	14	4
	DN50PN40	59	102	125	165	18	7	18	4
	DN80PN40	89	138	160	200	22	7	18	8

Diaphragm seal dimensions acc. to ANSI ASME 16.5

Material of wetted parts	Version	Diaphragm diameter **Dm**	Contact face dia. **Dp**	Dia. of bolt circle **Do**	External diameter **Dz**	Thickness **B**	Thickness **h**	Diameter of holes **d**	Number of holes
Hastelloy, Nickel, Monel	**2” ANSI 150**	59	92	120,5	150	18	7	20	4
	3” ANSI 150	89	123	152,5	190	22	7	20	4
Titanium	**2” ANSI 150**	59	92	120,5	150	18	2	20	4
	3” ANSI 150	89	127	152,5	190	22	2	20	4
Tantalum	**2” ANSI 150**	59	92	120,5	150	18	8	20	4
	3” ANSI 150	89	127	152,5	190	22	8	20	4
Tantalum/Teflon	**2” ANSI 150**	59	92	120,5	150	18	7	20	4
	3” ANSI 150	89	127	152,5	190	22	7	20	4
Teflon	**1” ANSI 150**	35	53	79,5	110	16	2	16	4
	2” ANSI 150	59	92	120,5	150	18	7	20	4
	3” ANSI 150	89	123	152,5	190	22	7	20	4

Application

The diaphragm seal is a pressure-transmitting, diaphragm-type device. The pressure signal is transfered to the cooperating pressure measuring device (pressure transmitter, pressure gauge) through manometric liquid filling the space between the separating diaphragm of the seal and the pressure measuring device. The diaphragm seal function is to isolate the pressure measuring device from damaging impacts caused by either medium or installation:

- high corrosiveness;
- low or high temperature, increased viscosity, impurities;
- vibrations of the installation (remote diaphragm seal).

Recommended minimum measuring range, depending on the type of the set: pressure measuring device - diaphragm seal

Pressure measuring device	Diaphragm seal type	Diaphragm seal version		
		DN25 / 1”ANSI	DN50 / 2”ANSI	DN80 / 3”ANSI
Transmitter	direct	1 bar	0,4 bar	0,1 bar
	remote	X	1 bar	0,4 bar
Gauge ∅100	direct	6 bar	1 bar	1 bar
	remote	X	2,5 bar	2,5 bar

Available chemical-resistant materials

Diaphragm material	Contact face material	Over pressure limit
Monel	Monel	40 bar
Hastelloy	Hastelloy	40 bar
Nickel	Nickel	40 bar
Tantalum	Tantalum	40 bar
Tantalum	Teflon	16 bar
Titanium	Titanium	40 bar
Teflon	Teflon	40 bar (10 bar for DN25 and 1”)
Gold	Gold	40 bar

Teflon/Teflon diaphragm seals not applicable with Exia transmitters

Zero error from ambient temperature change

Diaphragm seal type	Absolute zero error per 10°C for the diaphragm seal		
	DN25 / 1”ANSI	DN50 / 2”ANSI	DN80 / 3”ANSI
direct	20 mbar	5 mbar	2 mbar
remote (2 m capillary)	X	10 mbar	4 mbar

An additional zero error, resulting from temperature fluctuations in a medium, depends on the temperature gradient in the oil-based diaphragm sealing system. The error value is, in any case, significantly smaller than the error value shown in the table.

Medium temperature range

-30...180°C for remote diaphragm seal
special versions up to 250°C
-30...150°C for diaphragm seal

Important:
- standard outlet capillary from flange:
  direct mounted diaphragm seal - axial
  remote mounted diaphragm seal - axial
  other configuration avaliable on request

Special versions

- Filling liquid – FLUOROLUBE
- Direct diaphragm seal for a medium temp. over 150°C
- Gold plated wetted parts material- after consulting with Aplisens.

Ordering procedure

direct diaphragm seal: **pressure measuring device / S-Ch ..... – DN..... / spec. ver. – description**

remote diaphragm seal: **pressure measuring device / S-ChK ..... – DN..... / K = ... m / ..... / spec. ver. – description**

Transmitter or gauge – see the code in the appropriate catalogue sheet

Material of diaphragm and contact face

Diaphragm seal version

Capillary length

Mounting of capillary:
AX - axial (standard version)
RD - radial (on request)

When ordering a diaphragm seal please state the type of medium and the expected ranges of concentration and temperature.

Threaded seals with large diaphragm S-Comp...

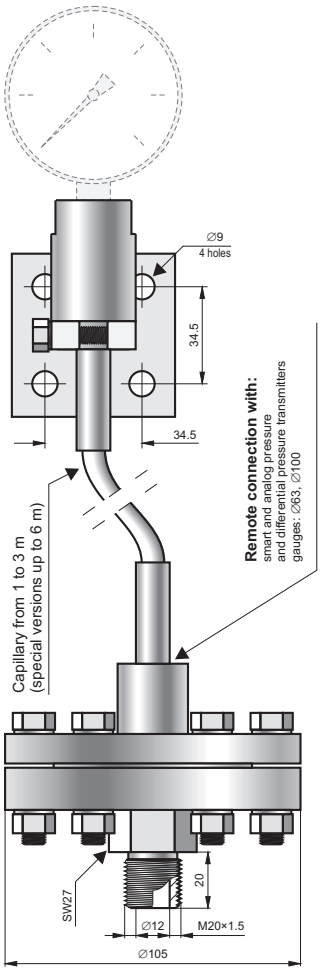

Type S-Comp
Mounting part with process connection
M20×1.5 (P type); G1/2" (GP type)

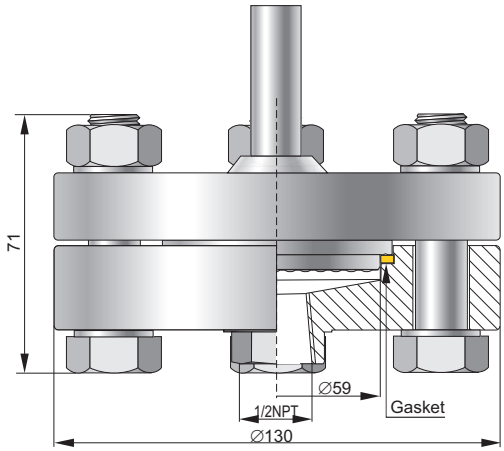

Type S-Comp10M
Mounting part with process connection
1/2"NPTF

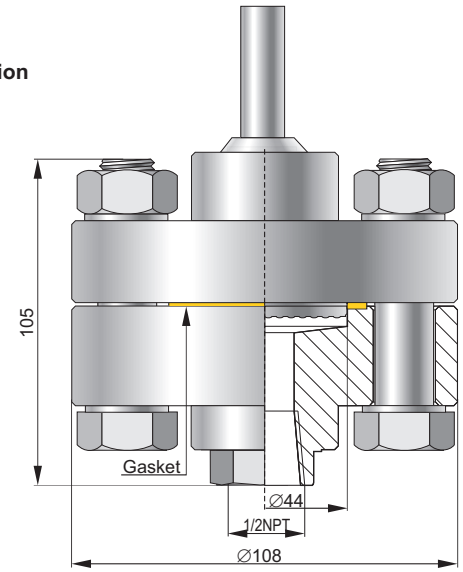

Type S-Comp25M
Type S-Comp60M
Mounting part with process connection
1/2"NPTF

Application

The diaphragm seal is a pressure-transmitting, diaphragm-type device. The pressure signal is sent to the co-operating pressure measuring device (pressure transmitter, pressure gauge) through manometric liquid filling the space between the separating diaphragm of the seal and the pressure measuring device. The diaphragm seal task is to isolate the pressure measuring device from damaging impacts caused by either medium or installation:

- low or high temperature, increased viscosity, impurities;
- vibrations of the installation (remote diaphragm seal);
- pressure fluctuations.

S-Comp diaphragm seals have a large separating diaphragm (∅70) while retaining a compact economic overall design. Benefits of S-Comp diaphragm seals include:

- the ability to take measurements within a narrow range;
- simplicity of assembly.

Maximum measuring range:

Type S-Comp:	0...16bar	**Type S-Comp10M:**	0…100bar
Type S-Comp25M:	0…250bar	**Type S-Comp60M:**	0…600bar

Recommended minimum measuring range (bar), depending on the type of the set: pressure measuring device - diaphragm seal

Diaphragm seal type	Transmitters APC-2000*, PCE-28	Gauge ∅63	Gauge ∅100
direct	0.2	1	1
remote	0.5	2.5	2.5

* The ranges given in the table for the smart APC-2000 transmitter should be taken as set ranges.

Zero error from ambient temperature change

Diaphragm seal type	Absolute error of zero
direct	0.6 mbar / 10°C
Remote (2m capillary)	2 mbar / 10°C

An additional zero error, resulting from temperature fluctuations in a medium, depends on the temperature gradient in the oil-based diaphragm sealing system. The error value is, in any case, significantly smaller than the error value shown in the table.

Medium temperature range

-30...200°C for remote diaphragm seal
-30...150°C for direct diaphragm seal

Material of diaphragm, flange and mounting part

00H17N14M2 (316Lss)

Special versions

Diaphragm made of Hastelloy C 276
Capillary outlet at the side of the diaphragm seal
Direct diaphragm seal for medium temp. over 150°C
Others

Ordering procedure

direct diaphragm seal: **pressure measuring device / type of S-Comp..... / special version (description)**

remote diaphragm seal: **pressure measuring device /type of S-CompK..... / K = ... m / special version (description)**

Transmitter or gauge – see the code in the appropriate catalogue sheet

Mounting part design: type of process connection (P, GP)

Capillary length

Example: MS-100 gauge, measuring range 0÷6bar, process connection outlet bottom, remote threaded seal with large diaphragm and separable mounting part with process connection M20×1.5, capillary length 1.5 m.

MS-100 / 0 ÷ 6 bar / S-CompK M20×1.5 / K = 1.5 m

Threaded chemical seals with large diaphragm S-CompCh

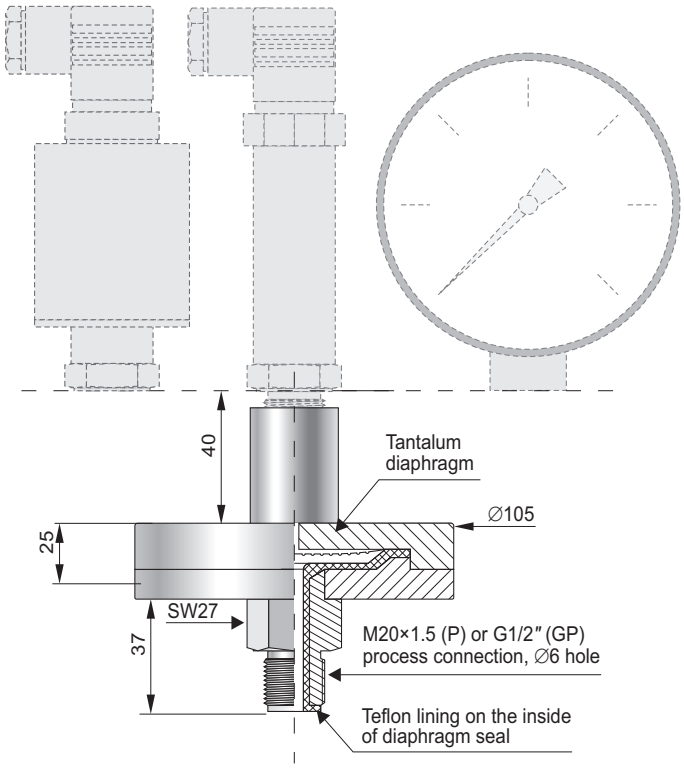

- ✓ **Measurement the pressure of hydrochloric, sulphuric and nitric acids in any concentration**
- ✓ **Measurement the pressure of chlorine**

Application

S-CompCh seals are applicable for measuring the pressure of corrosive media. The wetted parts of the diaphragm seal are made of Teflon and tantalum. Several corrosive chemicals, except for hydrofluoric acid, gaseous fluorine and soda lye, can be measured.

Recommended minimum measuring range (bar), depending on the type of the set: pressure measuring device - diaphragm seal

Diaphragm seal type	Transmitter	Gauge ∅100
direct	0.4	1
remote	1	6

Zero error from ambient temperature change

direct diaphragm seal: 5 mbar / 10°C

An additional zero error, resulting from temperature fluctuations in a medium, depends on the temperature gradient in the oil-based diaphragm sealing system. The error value is, in any case, significantly smaller than the error value shown above.

Maximum measuring rage	0...16 bar
Over pressure limit	25 bar
Medium temperature range	-30...100°C

Ordering procedure

pressure measuring device / S-CompCh .....

Transmitter or gauge – see the code in the appropriate catalogue sheet

Type of process connection: P, GP

Example: APCE-2000PZ- pressure transmitter, nominal measuring range 0÷7 bar, threaded chemical seal with large diaphragm, GP process connection G1/2″.

APCE-2000PZ / 0 ÷ 7 bar / S-CompCh GP

Threaded seals with large diaphragm S-Mazut

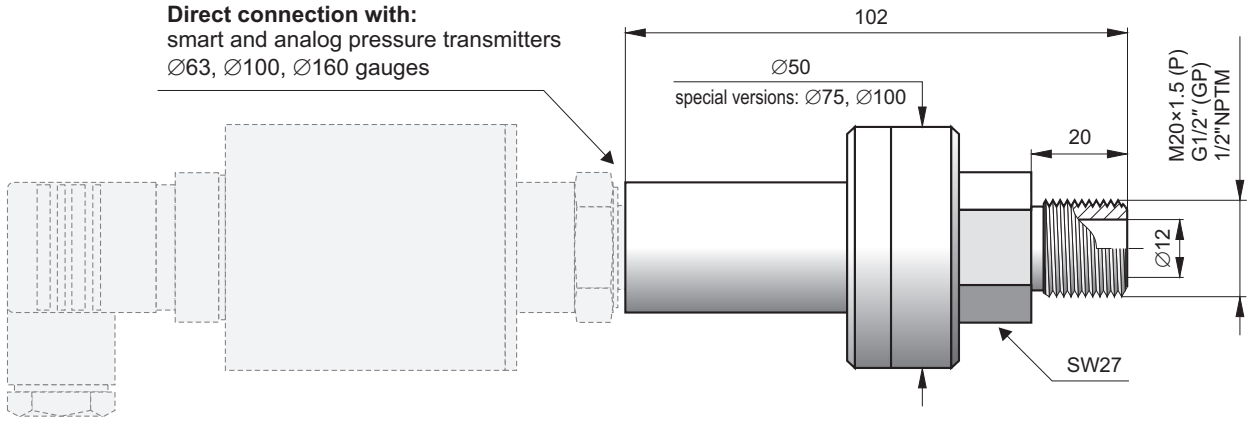

Application

The S-Mazut diaphragm seal is applicable to measurement of viscous liquids, at temperatures up to 150°C (300°C when remote diaphragm seal is used). A typical application is to measure the pressure of heavy fuel oil (petroleum atmospheric residue) in burners and in heat centers of power boilers.

Recommended minimum measuring range (bar), depending on the type of the set: pressure measuring device - diaphragm seal

Diaphragm seal type	Pressure transmitter			∅100 gauge		
	S-Mazut	S-Mazut75	S-Mazut100	S-Mazut	S-Mazut75	S-Mazut100
direct	2,5 bar	0,1 bar	0,05 bar	2,5 bar	1 bar	1 bar
remote	6 bar	0,4 bar	0,25 bar	6 bar	2,5 bar	1 bar

Zero error from ambient temperature change

Diaphragm seal type	S-Mazut	S-Mazut75	S-Mazut100
direct	4 mbar / 10°C	2 mbar / 10°C	0,8 mbar / 10°C
Remote (capillary 2m)	5 mbar / 10°C	3 mbar / 10°C	1 mbar / 10°C

For a set: pressure transmitter - special diaphragm seal (special diaphragm seal means the larger diaphragm diameter), there is the following relation: the quantity of thermal errors decreases proportionally to the cubed value of the active diameter of the separating diaphragm (i.e. to the diameter value raised to the third power).

An additional zero error, resulting from temperature fluctuations in a medium, depends on the temperature gradient in the oil-based diaphragm sealing system. The error value is, in any case, significantly smaller than the error value shown above.

Maximum measuring range 0...70 bar

Overpressure limit

S-Mazut 110 bar
S-Mazut75 50 bar
S-Mazut100 40 bar

Medium temperature range

-10...315°C for remote seal
-10...150°C for direct seal

Material of diaphragm and seal 316Lss

Special versions

∅75 and ∅100 versions for low ranges
Others

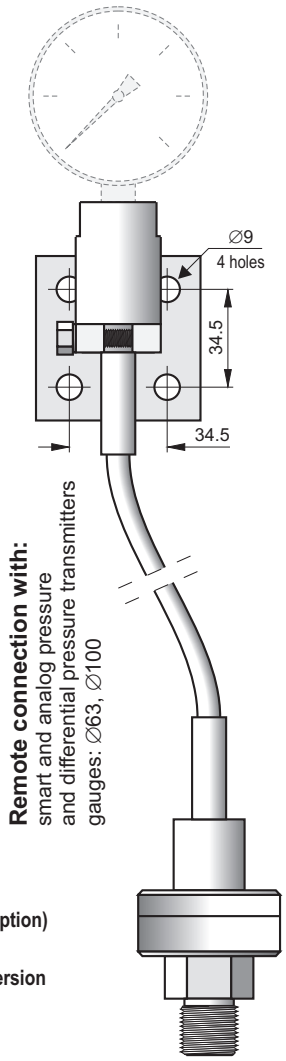

Ordering procedure

direct diaphragm seal:
pressure measuring device / S-Mazut / type of process connection **P, GP, 1/2"NPTM / special version (description)**

remote diaphragm seal:
pressure measuring device / S-MazutK / K = ... m / type of process connection **P., G, 1/2"NPTM / special version (description)**

Transmitter or gauge – see the code in the appropriate catalogue sheet

Capillary length

Sanitary diaphragm seals

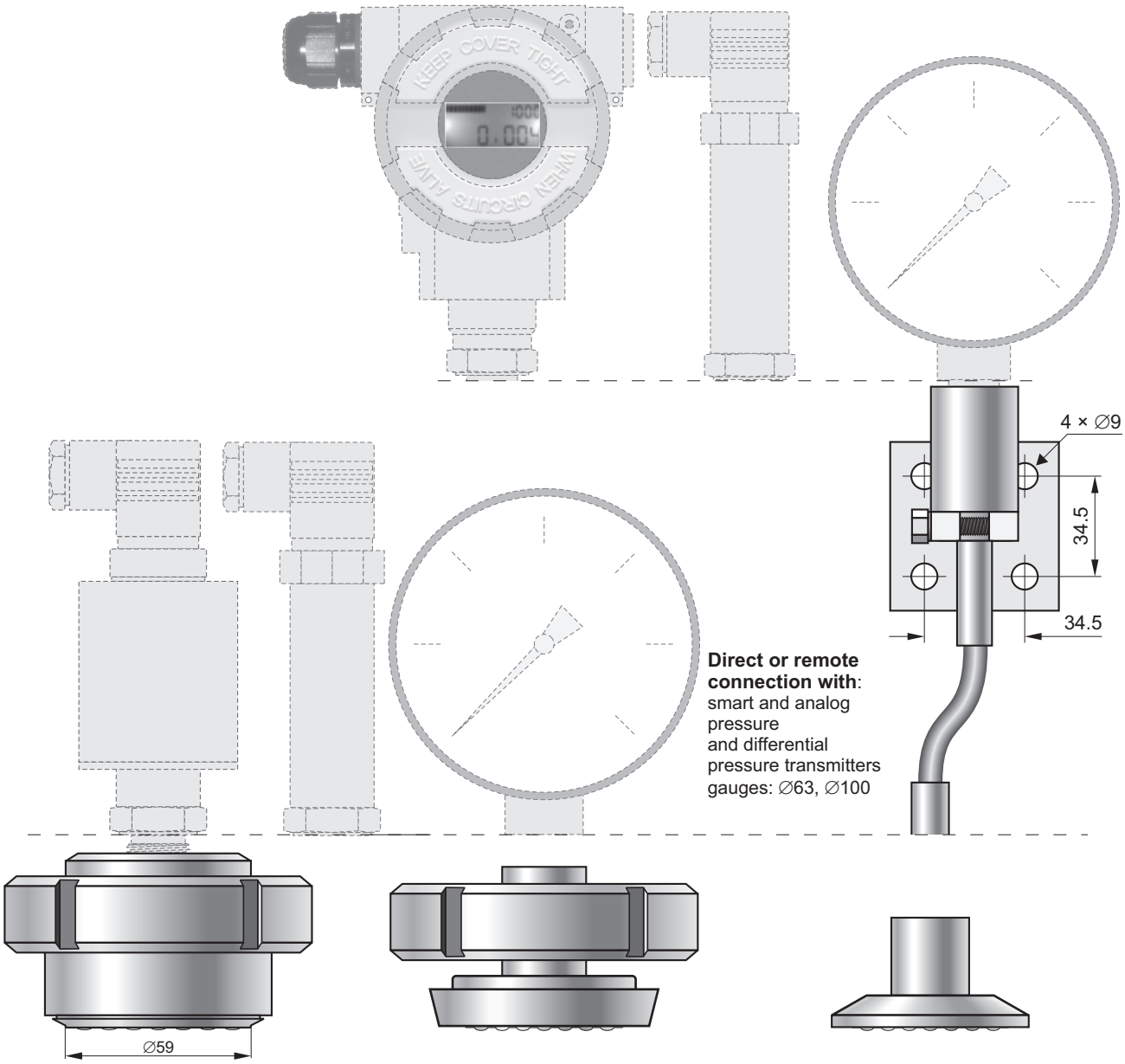

S-Poziom 50mm diaphragm seal

S-DIN 50mm diaphragm seal

S-Clamp 2″ diaphragm seal

Fitting accessories for sanitary diaphragm seals if required

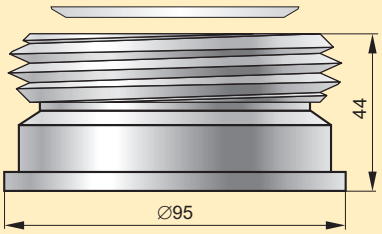

Socket S-Poziom with a silicone gasket

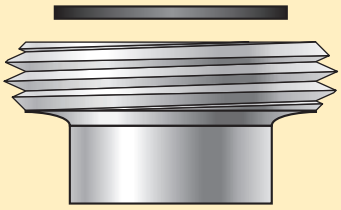

DIN 11851, size 50mm connection with a gasket

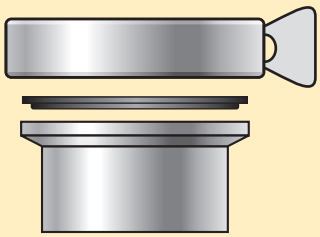

Tri-Clamp, size 2″ connection with clamp and gasket

Application

The diaphragm seal is a pressure-transmitting, diaphragm-type device. The pressure signal is sent to the cooperating pressure measuring device (pressure transmitter, pressure gauge) through manometric liquid filling the space between the separating diaphragm of the seal and the pressure measuring device. The diaphragm seal task is to isolate the pressure measuring device from damaging impacts caused by either medium or installation:

- low or high temperature, increased viscosity, impurities;
- vibrations of the installation (remote diaphragm seal);
- pressure fluctuations.

The both S-DIN and S-Clamp types of sanitary diaphragm seals can be used under aseptic conditions. They are typically applied to measure the pressure of media in the food and pharmaceutical industries.

Aseptic S-Poziom separator is typically mounted in the bottom parts of tanks. The construction has a diaphragm placed forward and so it does not make a hollow in the surface of the tank bottom part, which eliminates the settling of either the material or washing agent in a connection of the pressure device.

Maximum measuring range 25bar

Recommended minimum measuring range (bar), depending on the type of the set: pressure measuring device - diaphragm seal

Diaphragm seal type	Smart transmitters*, PCE-28	Gauge ∅63	Gauge ∅100
direct	0.1	1	1
remote	0.5	2.5	2.5

* The ranges given in the table for smart transmitters should be taken as set ranges.

Note: for measuring ranges lower than those listed in the table, we recommend special models of diaphragm seal, i.e.: Clamp 3″ and DIN 80mm

Zero error from ambient temperature change

Diaphragm seal type	Absolute zero error	
	S-Clamp and **S-DIN**	**S-Poziom**
direct	0.8 mbar / 10°C	0.3 mbar / 10°C
Remote (2m capillary)	5 mbar / 10°C	3 mbar / 10°C

An additional zero error, resulting from temperature fluctuations in a medium, depends on the temperature gradient in the oil-based diaphragm sealing system. The error value is, in any case, significantly smaller than the error value shown in the table.

For a set: pressure transmitter - special diaphragm seal (special diaphragm seal means the larger diaphragm diameter), there is the following relation: the quantity of thermal errors decreases proportionally to the cubed value of the active diameter of the separating diaphragm (i.e. to the diameter value raised to the third power).

Medium temperature range
-30...200°C for remote diaphragm seal
-20...150°C for direct diaphragm seal
-30...85°C for measuring ranges to –1bar

Material of diaphragm and seal
00H17N14M2 (316Lss)

Special versions

- ◊ filling liquid - edible oil (medium temp. range -10...150°C)
- ◊ Other sanitary seals, eg. DIN 25 mm, DIN 40 mm, Tri-Clamp 1", Tri-Clamp 1,5″, SMS 50 mm, DRD, Homogenizator, Varivent
- ◊ Seal with customised connection
- ◊ Direct diaphragm seal for medium temp. over 150°C
- ◊ Others

Ordering procedure

direct diaphragm seal: **pressure measuring device / S-..... / special version (description)**

remote diaphragm seal: **pressure measuring device / S-.....K / K = ... m / special version (description)**

Transmitter or gauge – see the code in the appropriate catalogue sheet

Type and size of sanitary seal

Capillary length

Example: PCE-28 pressure transmitter, measuring range 0÷6bar, field casing, direct sanitary diaphragm seal type S-DIN, size 50mm

PCE-28 / 0 ÷ 6 bar / PZ / S-DIN 50

Diaphragm seal dimensions

S-DIN

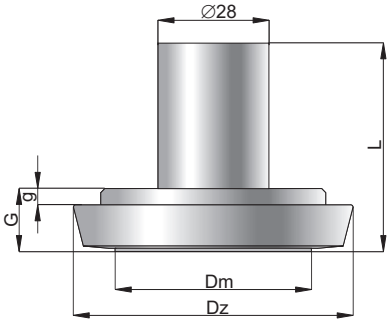

S-SMS

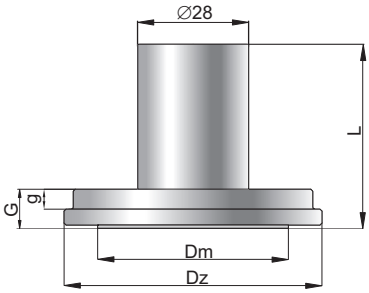

S-Clamp

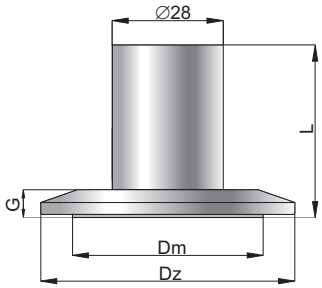

	Dz [mm]	**Dm** [mm]	**G** [mm]	**g** [mm]	**L** [mm]
S-DIN 25	44	25	15,8	5	52,3
S-DIN 32	50	30	15,8	5	52,3
S-DIN 40	56	35	14,8	4	51,3
S-DIN 50	68,5	48	15,8	4	51,3
S-DIN 65	86	59	16,8	4	52,3
S-DIN 80	100	75	16,8	4	52,3
S-SMS 1"	35,5	25	6,2	2	42,7
S-SMS 1,5"	54,9	35	10	4	46,5
S-SMS 2"	64,9	48	10	5	46,5

	Dz [mm]	**Dm** [mm]	**G** [mm]	**L** [mm]
S-Clamp 1"	50,5	22	7	43,5
S-Clamp 1,5"	50,5	35	7	43,5
S-Clamp 2"	64	48	7	43,5
S-Clamp 2,5"	77,5	54	7	43,5
S-Clamp 3"	91	70	7,8	44,3
S-Clamp 4"	119	89	9,8	45,8
S-Clamp DN 25	50,5	25	7	43,5
S-Clamp DN 40	50,5	35	7	43,5
S-Clamp DN 50	64	48	7	43,5
S-Clamp DN 65	91	70	7,8	44,3
S-Clamp DN 100	119	89	9,8	45,8

S-POZIOM 50

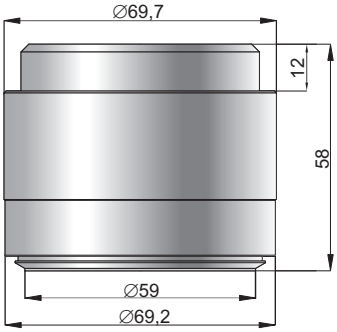

S-POZIOM 25

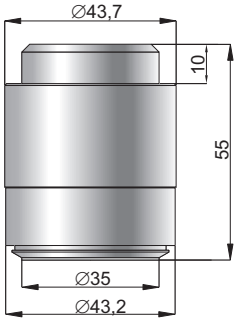

S-DRD 65

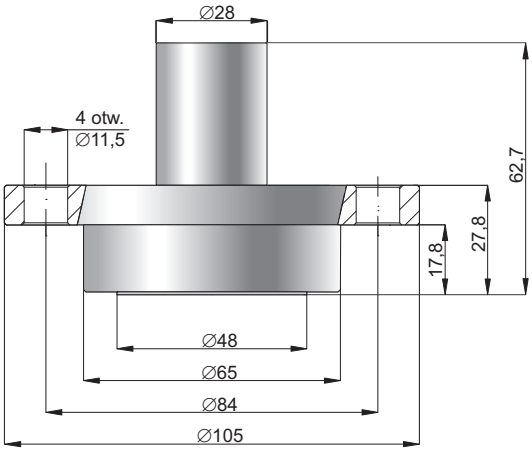

S-Varivent DN50

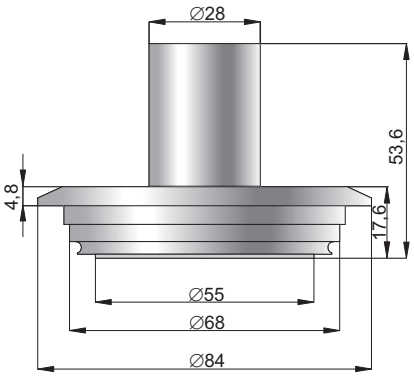

Threaded seals with flush diaphragm and radiator S-RC

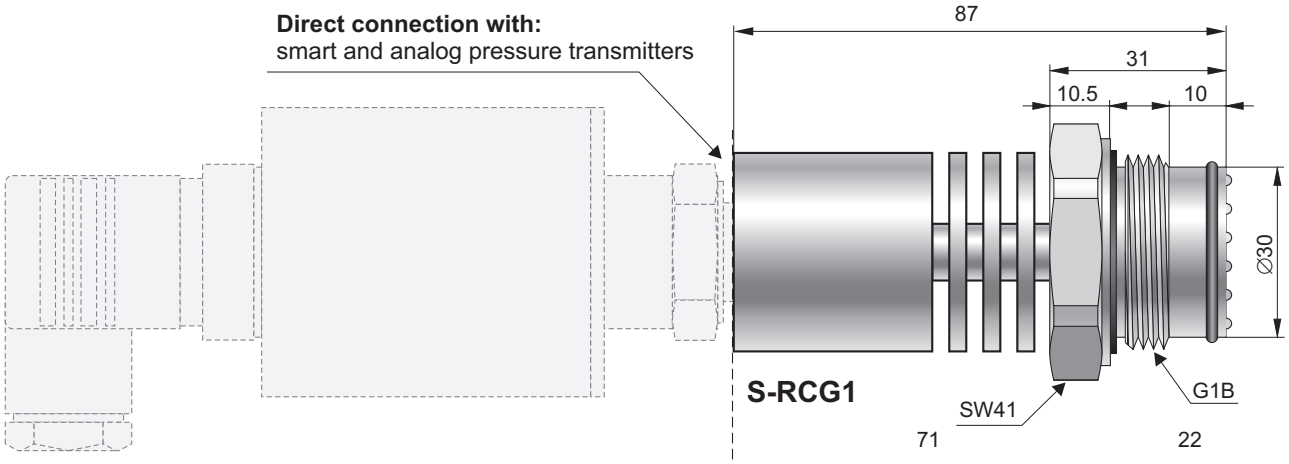

Application

S-RC diaphragm seals are applicable to the measurement of hot, viscous, solidifying or contaminated liquids, in any cases where an impulse line cannot be used.

Installation

For installation of transmitters with S-RC diaphragm seals, the Aplisens fitting sockets are recommended.

Recommended minimum measuring range 0.4bar
(for pressure transmitters)
Zero error from ambient temperature change
60 mbar / 10°C for range ≥ 2.5 bar
10 mbar / 10°C for range < 2.5 bar
An additional zero error, resulting from temperature fluctuations in a medium, depends on the temperature gradient in the oil-based diaphragm sealing system. The error value is, in any case, significantly smaller than the error value shown above.

Maximum measuring range
0...40 bar
Overpressure limit
100 bar

Medium temperature range 0...160°C
Material of diaphragm and seal 00H17N14M2 (316Lss)

Special versions

◊ Diaphragm seal for temperatures up to 260°C
◊ Hastelloy – wetted parts of diaphragm seal made of Hastelloy C276 (overpressure limit 40 bar)
◊ Aseptic version S-RCG1, sealing upstream the thread, filling liquid - edible oil (max. temp. 150°C)
◊ Others

Ordering procedure

transmitter / S-RC___ / special version – description

Pressure transmitter – see the code in the appropriate catalogue sheet

Type of process connection: **G1″**

Example: PCE-28 pressure transmitter, range 0–1bar, cable electrical connection, S-RC diaphragm seal with CG1″ process connection.

PCE-28 / 0 ÷ 1 bar / PK / S-RCG1

Flanged seals with extended diaphragm and direct diaphragm cleaning system S-TK-P

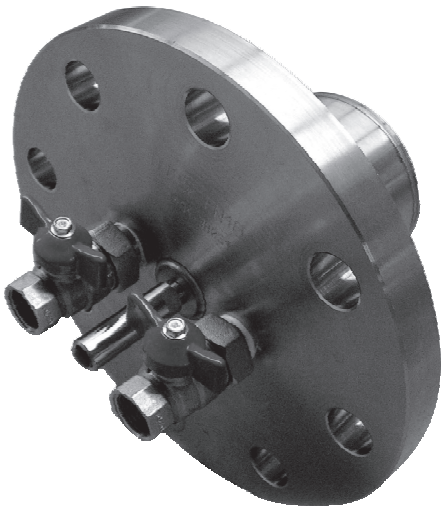

Application

S-TK-P diaphragm seals are special execution of flanged seals with extended diaphragm S-TK–DN100/T=100mm with additional diaphragm cleaning system.

S-TK-P are applicable to the measurement of very viscous medium. Cleaning system allows to clean membrane without dismounting diaphragm seal from the application.

Cleaning medium (e.g. water) is supplied to the membrane surface via two channels placed inside the diaphragm seal.

Cleaning is performed periodically with intervals suitable to the measured medium. Flushing channels are ended with two ˝ ” ball valves in the back of diaphragm seal.

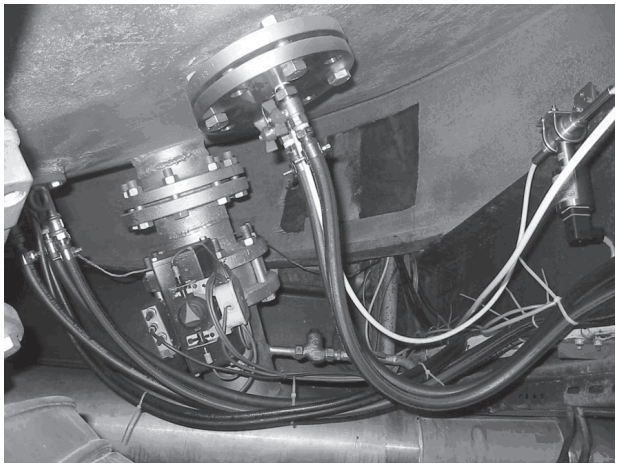

Ordering procedure

transmitter / S-TK-P / K = ... m

Pressure transmitter – see the code in the appropriate catalogue sheet

Capillary length

Example: APC-2000ALW transmitter, nominal measuring range 0÷1 bar, flanged seal with extended diaphragm and direct diaphragm cleaning system, 6 m capillary

APC-2000ALW / 0 ÷ 1 bar / S-TK-P / K = 6 m

Notes

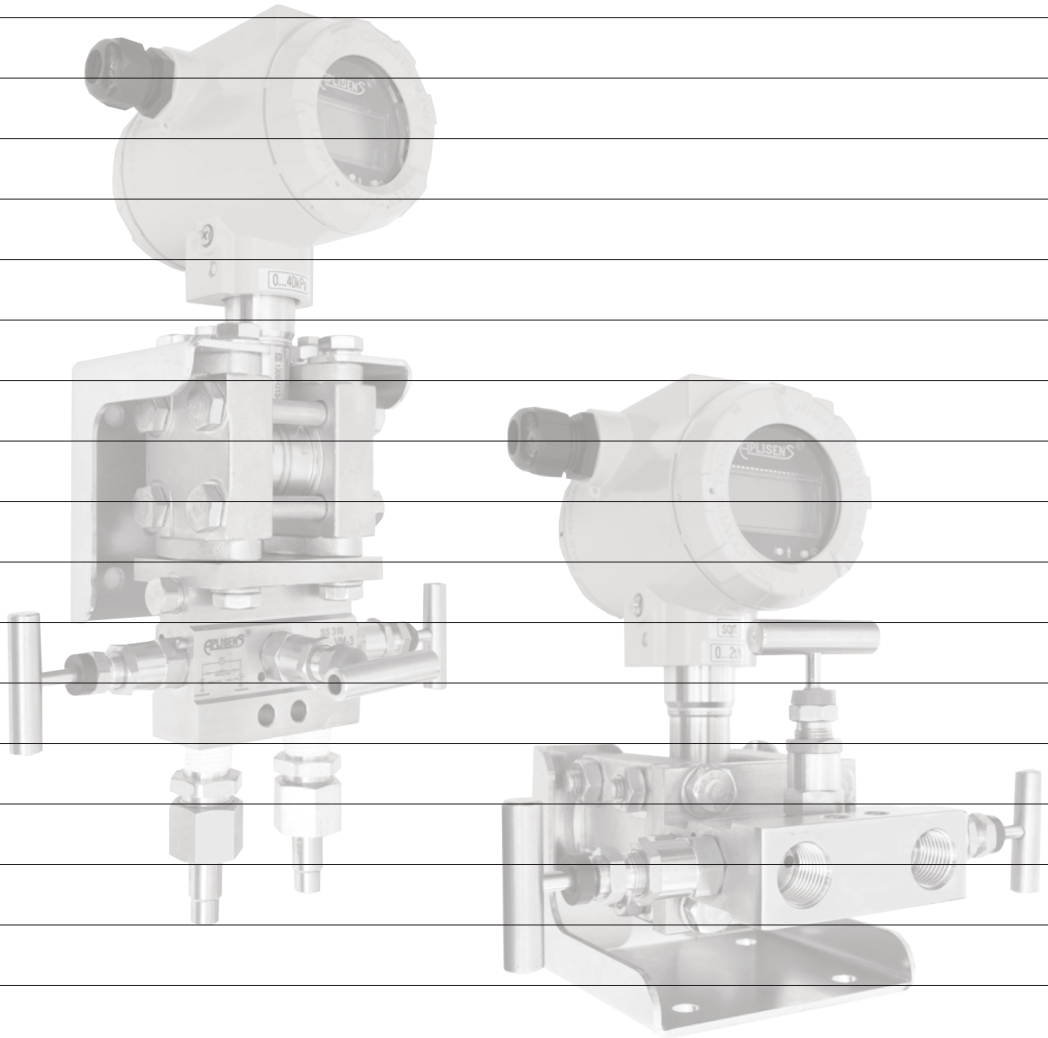

Chapter IV

Valves and fitting accessories

VM-3 and VM-5 valve manifolds ..... IV/ 2

Fitting accessories ..... IV/ 4

VM-3 and VM-5 valve manifolds

✓ **Body material – stainless steel (316ss)**

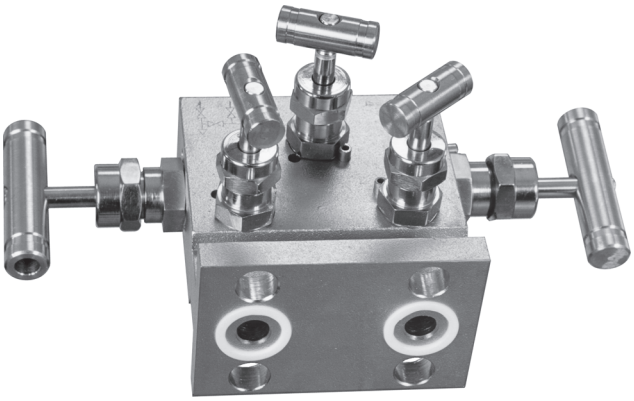

VM-5 valve

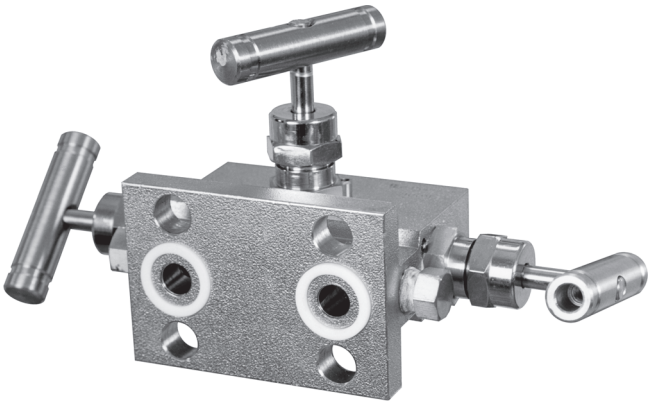

VM-3 valve

Features

3-valve and 5-valve manifolds are used where relative pressure transmitters are installed. They enable essential operations to be performed on the transmitters, such as starting up a transmitter or setting the zero position in conditions of static or atmospheric pressure. The five-valve manifold also enables a calibrator to be connected for metrological testing of the transmitter. The VM-3 and VM-5 have a modern lightweight construction. The high precision of manufacture enables individual valves to be opened and closed easily.

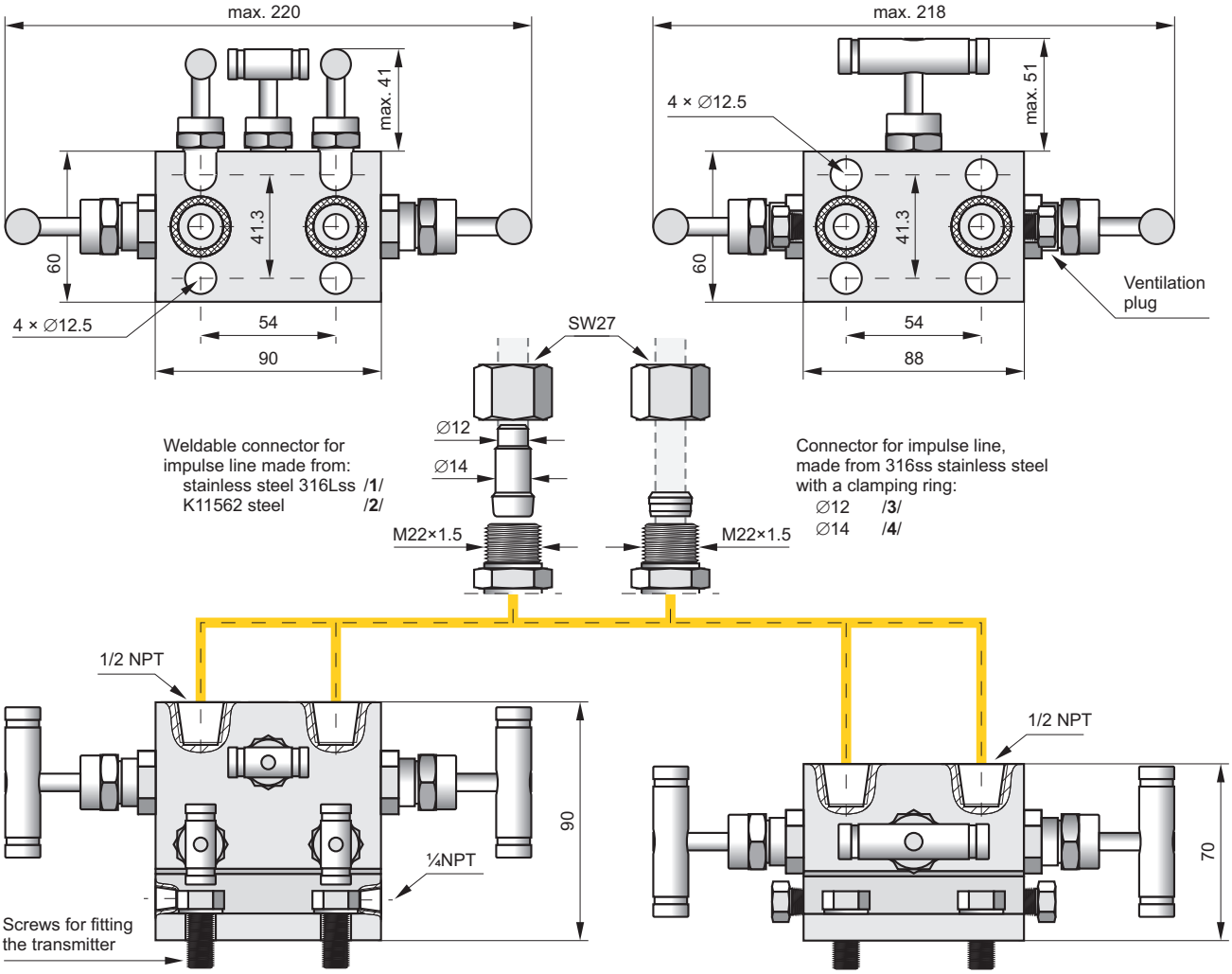

Technical parameters

Maximum pressure 420 bar (according to the graph)

Pin packing PTFE or graphite

Body material 316ss

Weight: VM-3 1.8 kg
VM-5 2.54 kg

Connectors:
to the installation – 1/2" NPT sockets
to the transmitter – 54 mm spacing

Example of installation of the VM-3 with fitting accessories

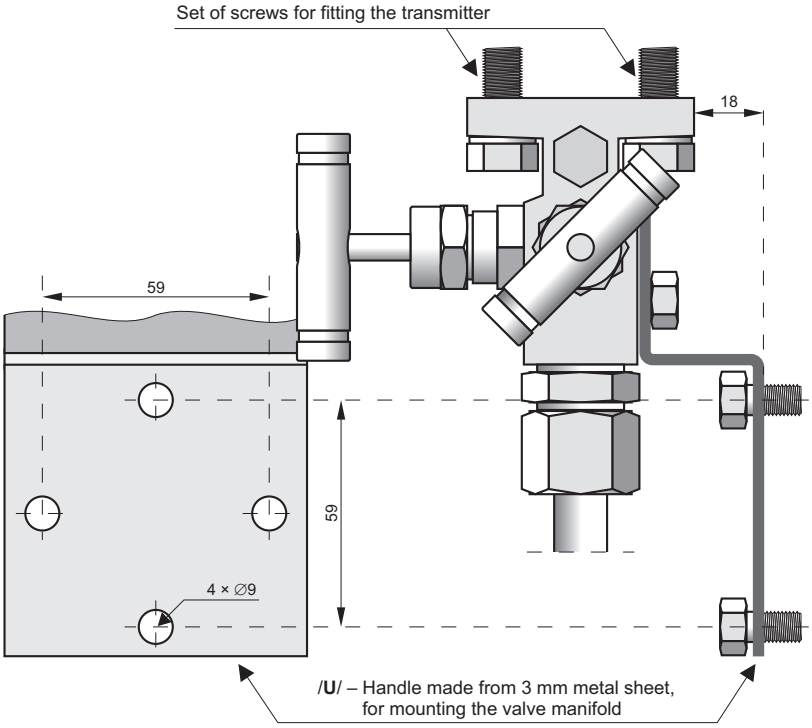

Connection diagrams

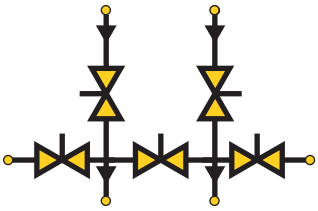

VM-5 valve

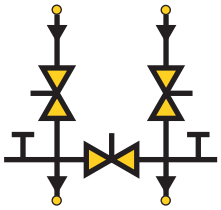

VM-3 valve

Operating pressure range as a function of temperature

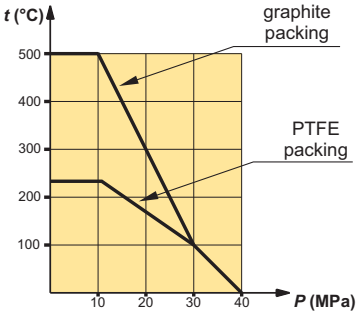

Special versions

Versions R

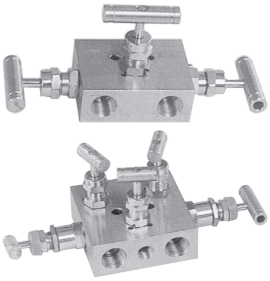

Versions H

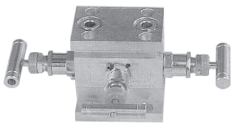

Recommendations concerning selection of valves

The standard versions of the valves have Teflon pin packing; a special version is available with graphite packing. The special version should be used only when the valves operate at temperatures in excess of 200°C.

The valve manifold is supplied with seals for the collar-type output points. To order, it can be supplied additionally with a set of M10 or 7/16″ screws for fitting the transmitter, connectors for impulse lines and a sheet-metal handle used to mount the valve on the construction.

Ordering procedure

Valve manifolds:

3-valve – **VM-3 /___/___**

5-valve – **VM-5 /___/___**

Special versions:
H – constructional versions (only VM-3)
R – constructional versions
Graphite – graphite pin packing
Tlen – valve adapted to contact with oxygen
NACE - NACE MR-01-75 comply

Additional equipment – description:

Code	Product
A	Set of M10 screws for fitting the transmitter (up to 250 bar)
B	Set of 7/16″ × 1'' screws for fitting the transmitter (up to 413 bar)
C	Set of 7/16″ × 2 1/4'' screws for fitting the transmitter with covers type COPLANAR
1	Set of weldable stainless steel connectors (316ss)
2	Set of weldable steel connectors (K11562)
3	Set of connectors with ∅12 clamping ring
4	Set of connectors with ∅14 clamping ring
U	Handle for mounting the valve

Fitting accessories - Valves

Needle valve VM-1

Material 316ss
Medium temperature, working pressure – according to the graph on page III/ 7
Ordering code:
Valve VM-1/M (input M20×1.5 M, output M20×1.5 F, Teflon packing)
Valve VM-1/G (input G1/2″ M, output G1/2″ F, Teflon packing)
Valve VM-1/graphite (input M20×1.5 M, output M20×1.5 F, Graphite packing)
Valve VM-1 oxygen (valve designed for contact with oxygen; input M20×1.5 M, output M20×1.5 F, Teflon packing)

Needle valve VM-1-R/R

Material 316ss
Medium temperature, working pressure – according to the graph on page IV/ 3
Input 1/2NPT F, output 1/2NPT F, Graphite packing, no vent port
Ordering code:
Valve VM-1-R/R/__
1 – Set of weldable stainless steel connectors (316ss)
2 – Set of weldable steel connectors (K11562)
3 – Set of connectors with ∅12 clamping ring
4 – Set of connectors with ∅14 clamping ring

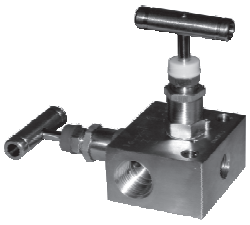

2-Valve Manifold VM-2

Material 316ss
Medium temperature, working pressure – according to the graph on page IV/ 3
Input 1/2NPT F, output 1/2NPT F, Teflon packing, vent port ¼NPT F
Ordering code:
Valve VM-2-R/R/_

Valve VM-2-R/R/__
1 – Set of weldable stainless steel connectors (316ss)
2 – Set of weldable steel connectors (K11562)
3 – Set of connectors with ∅12 clamping ring
4 – Set of connectors with ∅14 clamping ring

Option
.../NACE - NACE MR-01-75 comply

2-Valve Manifold VM-2-RM

Material 316ss
Medium temperature, working pressure – according to the graph on page IV/ 3
Input 1/2NPT F, output 1/2NPT F, Teflon packing, vent port ¼NPT F
Ordering code:
Valve VM-2-RM/M (input M20x1.5 M, output M20x1.5 F, Teflon packing, vent port ¼ NPT F
Valve VM-2-RM/G (input G1/2" M, output G1/2" F, Teflon packing, vent port ¼ NPT F
Valve VM-2-RM/1/2NPT (input 1/2"NPT M, output 1/2"NPT F, Teflon packing, vent port ¼ NPT F

Option:.
.../NACE - NACE MR-01-75 comply

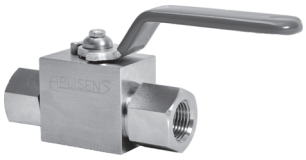

Ball valve
Material – H17N14M2 (**316 ss**)
Medium temperature - 80°C
Max pressure - 100 bar
Input, output process connection: 1/2NPT F
Ordering code:
Valve VM-1/B

Transmission tubes

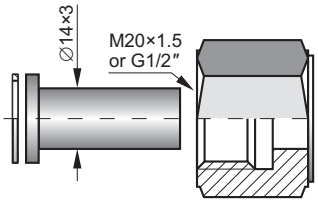

Connector to weld
Materials: 15HM – (SO) or 316Lss (S)
Ordering code
RedSpaw – S or **SO / M20×1.5** or **G1/2″**

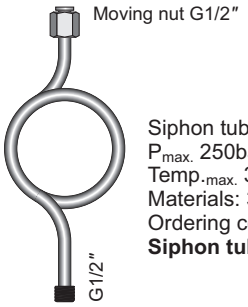

Siphon tube
$P_{max.}$ 250bar
$Temp._{max.}$ 300°C
Materials: 321ss
Ordering code
Siphon tube – S G1/2″

Fitting sockets

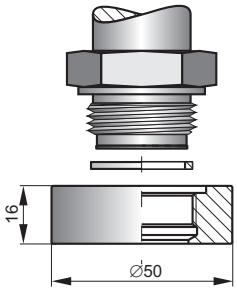

Socket with M30×2 thread for fitting transmitters with a CM30×2 process connection
Material – 316Lss
Sealing – teflon
Ordering code **Socket CM30×2**

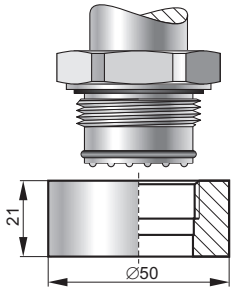

Socket with G1″ thread for fitting transmitters with a CG1 process connection
Material – 316Lss
Sealing – teflon
Ordering code **Socket CG1**

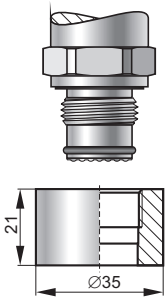

Socket with G1/2″ thread for fitting transmitters with a CG1/2 process connection
Material – 316Lss
Sealing – teflon
Ordering code **Socket CG1/2**

Adapters

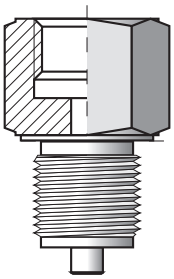

Material – 316Lss (S)

Ordering code: **Red___**

Dimension of male thread

G1/2″ **R1/2″** **1/4NPT** **M12×1.5** **G1/4″** **1/2”NPT F** **1/4”NPT F**

Material – brass

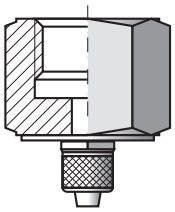

∅6×1 elastic tube

Ordering code:
Red∅6 – M

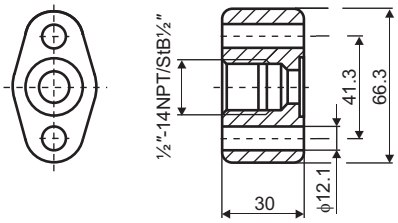

Adapter for differential pressure transmitters with C type process connection
Material – 316Lss
Ordering code: **Red-dP/1/2″ NPT**

Mounting brackets

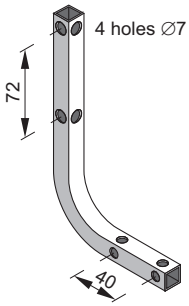

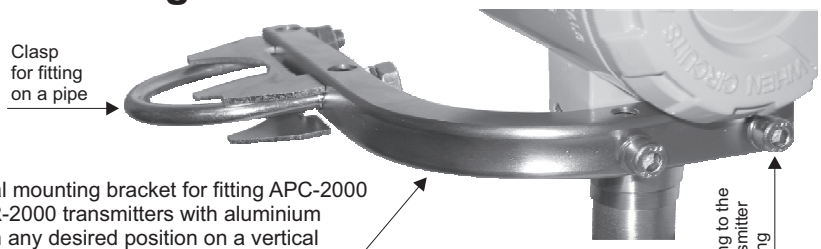

Universal mounting bracket for fitting APC-2000 and APR-2000 transmitters with aluminium casing in any desired position on a vertical or horizontal pipe (∅30…∅50)

Ordering code:
AL: material zinced steel
AL(SS): material ss304
AL(SS316): material ss316

Mounting bracket for fitting differential pressure transmitters with C and C(7/16) type process connections on a 2″ pipe or on a wall

Ordering code:
C-2”: mat. zinced steel, screws M10
C-2”(SS): mat. ss304, screws M10
C-2”(SS316): mat. ss316, screws M10
C-2”B: mat. zinced steel, screws 7/16"UNF
C-2”B(SS): mat. ss304, screws 7/16"UNF
C-2”B(SS316): mat. ss316, screws 7/16"UNF

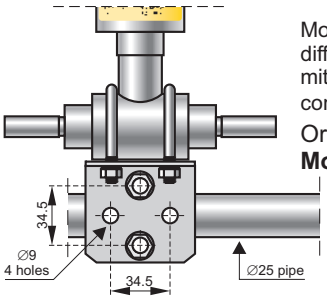

Mounting bracket for fitting differential pressure transmitters with P type process connections on a ∅25 pipe.

Ordering code:
Mounting bracket FI 25

Chapter V

Hydrostatic level probes, hydrostatic density transmitter

Hydrostatic level probes
SGE-25 and SGE-16 ..... V/ 2

Hydrostatic level probe
SGE-25/Hastelloy ..... V/ 4

Hydrostatic level probes
SGE-25S and SGE-25C..... V/ 6

Smart level probe
SGE-25.Smart ..... V/ 8

Smart level probe
SGE-25.Modbus ..... V/ 10

Smart level transmitter APC-2000ALW/L.....V/ 11

Level switches
ERH ..... V/ 13

Level switches
ERH-SMALL ..... V/ 16

Bilge level switches
ERH-11-20 ..... V/ 17

Magnetic level switch
ERH-XX-20 ..... V/ 18

Float level switch
ERH-01-18..... V/ 19

Hydrostatic level probes SGE-25 and SGE-16

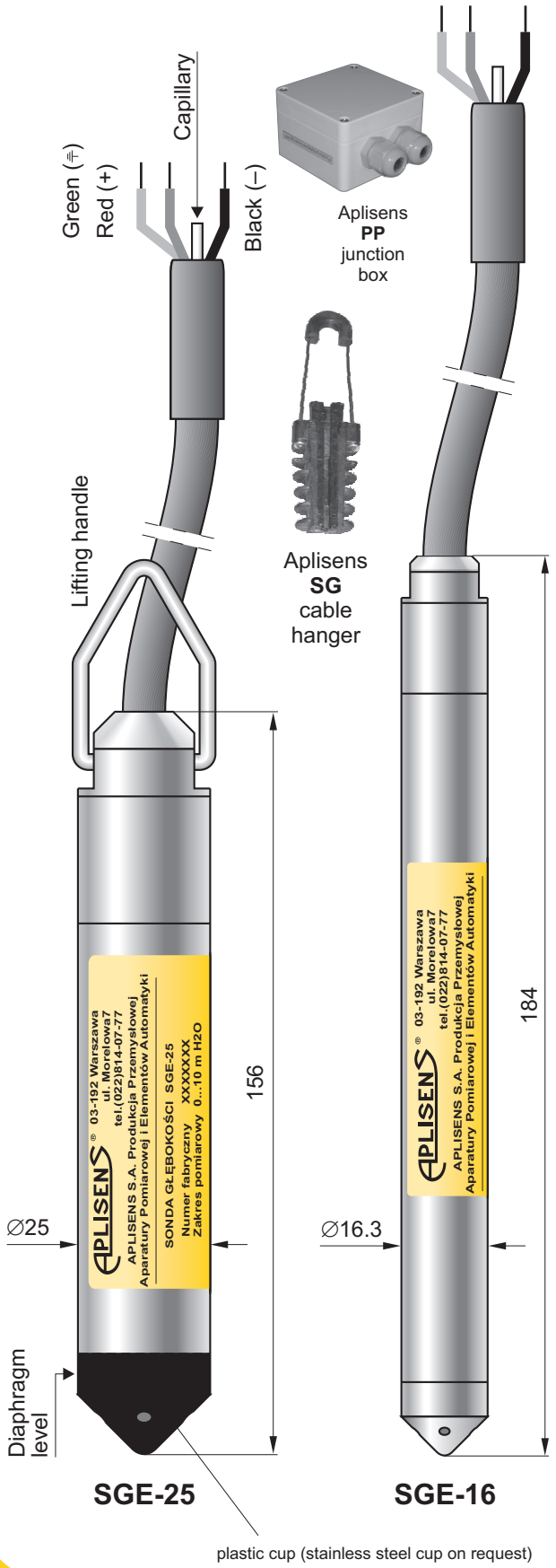

- ✓ **Any measurement range from 1 up to 500 m H_2O**
- ✓ **Integrated internal overvoltage protection circuit**
- ✓ **Marine certificate DNV**
- ✓ **ATEX Intrinsic safety**

Application

The SGE-25 hydrostatic level probe is applicable to measure liquid levels in tanks, deep wells or piezometers.

The SGE-16 probe is a specialized device designed to measure water levels in narrow diameter piezometers or wells.

Principles of operation, construction

The probe measures liquid levels, basing on a simple relationship between the height of the liquid column and the resulting hydrostatic pressure. The pressure measurement is carried out on the level of the separating diaphragm of the immersed probe and is related to atmospheric pressure through a capillary in the cable.

The active sensing element is a piezoresistant silicon sensor separated from the medium by an isolating diaphragm. The electronic amplifier, which works in combination with the sensor, and is meant to standardize the signal, is additionally equipped with an overvoltage protection circuit, which protects the probe from damage caused by induced interference from atmospheric discharges or from associated heavy current engineering appliances.

Installation, method of use

When lowered to the reference level, the probe may either hang freely on the cable or lie on the bottom of the tank. The cable with the capillary can be extended using a standard signal cable. For the cable connection a special Aplisens **SG** cable hanger is recommended. The cable connection should be situated in a non-hermetically sealed box (the internal pressure inside the box should be equal to the atmospheric pressure), preventing water or other contaminants from getting into the capillary. The Aplisens **PP** junction box is recommended For systems with long signal transmission lines, it is recommended the using of an additional Aplisens UZ-2 overvoltage protection circuit in the form of a wall-mounted box which allows the cables connection. When the probe cable is being wound up, the minimum winding diameter should be 30cm and the cable should be protected from mechanical damage.

If there is a possibility of turbulence in the tank (for example, because of the mixer operating mixers or a turbulent inflow), the probe should be installed inside a screening tube (e.g. made of PVC). If the probe is to be lowered deeper than 100m, the cable should be hanged at steel lifting rope. Cleaning the probe diaphragm by mechanical means is strictly prohibited.

Technical data for the SGE-25 level probe

Measuring range
Any measuring range 1 ÷ 500 m H_2O

	Measuring Range		
	1 m H_2O	**4 m H_2O**	**0...10 m H_2O ÷ 500 m H_2O**
Overpressure Limit (repeatable – without hysteresis)	40 × range	25 × range	10× range (max. 700 m H_2O)
Accuracy % FSO acc. to IEC 60770	0,6%	0,3%	0,2%
Accuracy % FSO acc. to BFSL	0,3%	0,15%	0,1%
Thermal error	Typical 0,3% / 10°C max 0,4% / 10°C		Typical 0,2% / 10°C max 0,3% / 10°C

Long term stability 0,1% or 1 cm H_2O for 1 year
Hysteresis, repeatability 0,05%
Thermal compensation range 0 ÷ 40°C – standard
-10 ÷ 70°C – special version
Medium temperature range -30 ÷ 40°C – standard
0 ÷ 80°C – ETFE and PTFE version
CAUTION: The medium must not be allowed to freeze in the immediate vicinity of the probe

Technical data for the SGE-16 level probe

Measurement ranges 10 ÷ 100 m H_2O
Overpressure limit 10 × range (max. 700 m H_2O)
(repeatable – without hysteresis)
Accuracy 0,3%
Hysteresis, repeatability 0,05%
Thermal compensation range 0 ÷ 40°C
Process temperature limit -30 ÷ 40°C
(version with ETFE and PTFE cable) 0 ÷ 80°C

Electrical parameters (applicable to both probes)

no	Signal type	Power supply	Available in models
1	4 ÷ 20mA	8…36 VDC	SGE-25
2	4 ÷ 20mA	9…28 VDC	SGE-25/Exia
3	0 ÷ 10V	13…30 VDC	SGE-25
4	0 ÷ 3,3V	5,5…16 VDC	SG-25A, SG-25A/Exia
5	0 ÷ 3,3V	4,1…5,6 VDC	SG-25B, SG-25B/Exia
6	0,5 ÷ 4,5 V	8…16 VDC	SG-25A, SG-25A/Exia
7	0,5 ÷ 4,5 V	5,0…5,6 VDC	SG-25B, SG-25B/Exia
8	4 ÷ 20mA	8…36 VDC	SGE-16
9	0 ÷ 3,3 V	3,6…4,5 VDC	SGE-16

Load resistance (for current output) $R[\Omega] \le \frac{U_{sup}[V] - 8V}{0{,}02A}$

Load resistance (for supply output) $R \ge 20k\Omega$

Error due to supply voltage changes 0,005% / V
Degree of protection IP68
Material of casing SS316L
Cable shield PU, ETFE, PTFE

Material of diaphragm
SGE-25 Hastelloy C276 (optionally SS316L)
SGE-16 SS316L

Ordering procedure

Model	Code	Description
SGE-25 (SG-25A, SG-25B) SGE-16		Level probe
Versions, certificates	/Exia *……	II 1G Ex ia IIC T4/T5/T6 Ga II 1G Ex ia IIB T4/T5/T6 Ga (for probe with cable in PTFE shield) I M1 Ex ia I Ma
	/MR *……	Marine certification (DNV), only with ETFE cable
	/-10÷70° *……	Extended thermal compensation range
* - applicable only for SGE-25	/Pt100……	Probe with Pt100 sensor (only with PU cable)
	/316L……	Membrane material: 316L
Measuring set range	/…÷… [required units]	Calibrated range in relation to 4mA and 20mA (or 0V and 10V) output
Output signal	/4…20mA……	4…20mA PS: SGE-25: 8…36VDC (Exia 9…28VDC, TR 10,5…36VDC) SGE-16: 10,5…36VDC
	/0…10V……	0…10V PS: SGE-25: 13…30VDC
	/0…3,3V……	0…3,3V PS: SG-25A, SG-25A/Exia: 5,5…16VDC SG-25B, SG-25B/Exia: 4,1…5,6VDC
	/0,5…4,5V……	0,5..4,5V PS: SG-25A, SG-25A/Exia: 8…16VDC SG-25B, SG-25B/Exia: 5…5,6VDC
Type of cable	/PU……	Polyurethane cable (medium temp. up to 40°C)
	/PU PZH……	Polyurethane, halogen free cable with hygienic certification (medium temp. up to 40°C)
	/ETFE……	ETFE cable (not suitable for mineral oil products, medium temp. up to 75°C)
	/ETFE-R……	ETFE cable with Viton/silicon sealing (suitable for mineral oil products, medium temp. up to 40°C)
	/PU + PTFE……	Polyurethane cable with PTFE shielding (medium temp. up to 75°C)
	/ETFE + PTFE…	ETFE cable with PTFE shielding (medium temp. up to 75°C)
Cable length	/L=…m……	Cable length (standard: 5m, 10m, 12m, 15m, 20m, 25m, other length on request)
Accessories	/SG	Cable hanger
	/PP	Junction box

Hydrostatic level probe
SGE-25/HASTELLOY

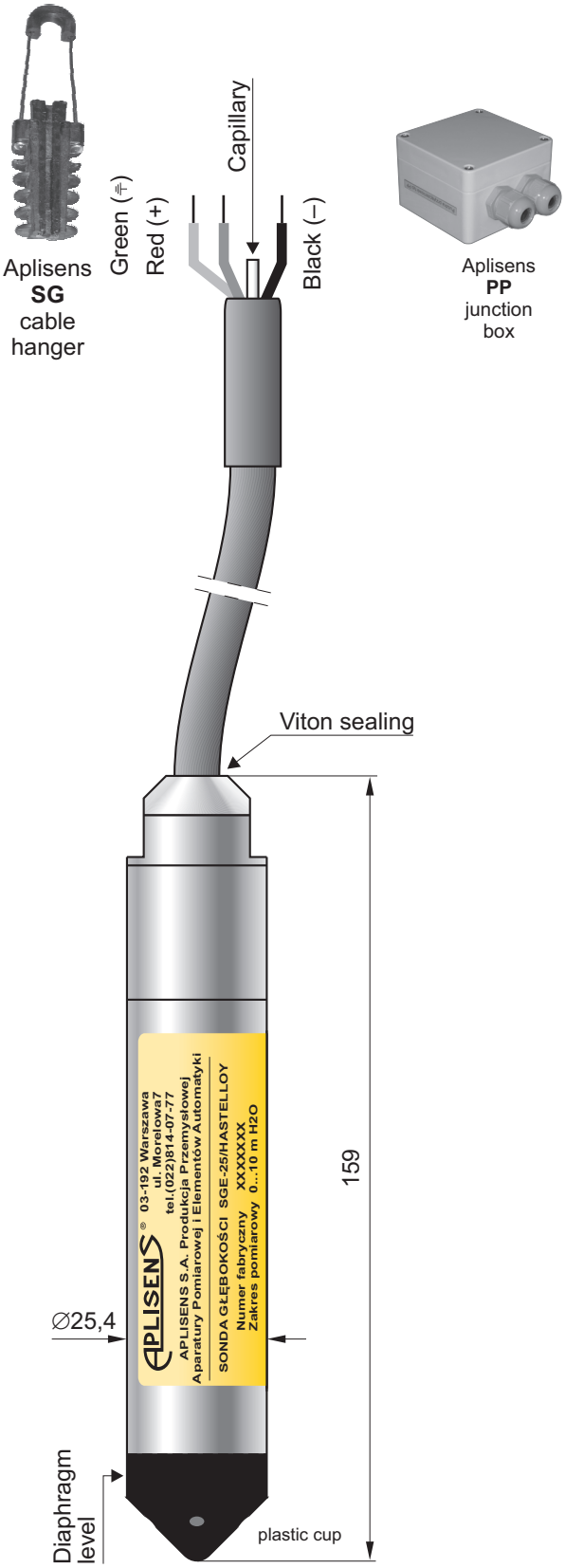

SGE-25/HASTELLOY

- ✓ **All wetted parts made in Hastelloy**
- ✓ **Any measurement range from 2 up to 20 m H_2O**
- ✓ **Integrated internal overvoltage protection circuit**
- ✓ **Marine certificate**

Application

The SGE-25/HASTELLOY hydrostatic level probe is applicable to measure liquid levels in tanks where probe made in stainless steel can't be used – e.g. in seawater or chemical applications.

Principles of operation, construction

The probe measures liquid levels, basing on a simple relationship between the height of the liquid column and the resulting hydrostatic pressure. The pressure measurement is carried out on the level of the separating diaphragm of the immersed probe and is related to atmospheric pressure through a capillary in the cable.

The active sensing element is a piezoresistant silicon sensor separated from the medium by an isolating diaphragm. The electronic amplifier, which works in combination with the sensor, and is meant to standardize the signal, is additionally equipped with an overvoltage protection circuit, which protects the probe from damage caused by induced interference from atmospheric discharges or from associated heavy current engineering appliances.

Installation, method of use

When lowered to the reference level, the probe may either hang freely on the cable or lie on the bottom of the tank. The cable with the capillary can be extended using a standard signal cable. For the cable connection a special Aplisens **SG** cable hanger is recommended. The cable connection should be situated in a non-hermetically sealed box (the internal pressure inside the box should be equal to the atmospheric pressure), preventing water or other contaminants from getting into the capillary. The Aplisens **PP** junction box is recommended For systems with long signal transmission lines, it is recommended the using of an additional Aplisens UZ-2 overvoltage protection circuit in the form of a wall-mounted box which allows the cables connection. When the probe cable is being wound up, the minimum winding diameter should be 30cm and the cable should be protected from mechanical damage.

If there is a possibility of turbulence in the tank (for example, because of the mixer operating mixers or a turbulent inflow), the probe should be installed inside a screening tube (e.g. made of PVC). If the probe is to be lowered deeper than 100m, the cable should be hanged at steel lifting rope. Cleaning the probe diaphragm by mechanical means is strictly prohibited.

Technical data for the SGE-25/Hastelloy level probe

Measuring range
Any measuring range 2 ÷ 20 m H_2O

	Measuring Range	
	2…4 m H_2O	**10..20 m H_2O**
Overpressure Limit (repeatable – without hysteresis)	10 × range	10 × range
Accuracy % FSO	0,2%	0,2%
Thermal error	Typical 0,3% / 10°C max 0,4% / 10°C	Typical 0,2% / 10°C max 0,3% / 10°C

Long term stability 0,1% or 1 cm H_2O for 1 year
Hysteresis, repeatability 0,05%
Thermal compensation range 0 ÷ 40°C – standard
Medium temperature range -30 ÷ 40°C
CAUTION: The medium must not be allowed to freeze in the immediate vicinity of the probe

Electrical parameters

Output signal, power supply:
Signal type: 4 ÷ 20mA
Power supply: 8…36 VDC

Load resistance (for current output)

$$R[\Omega] \leq \frac{U_{sup}[V] - 8V}{0{,}02A}$$

Error due to supply voltage changes 0,005% / V
Degree of protection IP68
Material of casing Hastelloy

Cable shield ETFE
Material of diaphragm Hastelloy

Ordering procedure

Model	Code	Description
SGE-25/Hastelloy		Level probe
Versions, certificates	/Exia…… /MR……	Ex II 1G Ex ia IIC T4/T5/T6 Ga/Gb I M1 Ex ia I Ma Marine certification (DNV)
Measuring set range	/…÷… [required units]	Calibrated range in relation to 4mA and 20mA
Output signal	/4…20mA……	4…20mA / power supply: 8…36VDC
Type of cable	/ETFE……	ETFE cable with Viton sealing (medium temp. up to 40°C)
Cable length	/L=…m……	Cable length (standard: 5m, 10m, 12m, 15m, 20m, 25m other length on request)
Accessories	/SG /PP	Cable hanger Junction box

Hydrostatic level probes SGE-25S and SGE-25C for measurement of waste liquid levels

- ✓ **Any measurement range from 2 up to 20 m H_2O**
- ✓ **Integrated internal overvoltage protection circuit**
- ✓ **ATEX Intrinsic safety**
- ✓ **Marine certificate DNV**

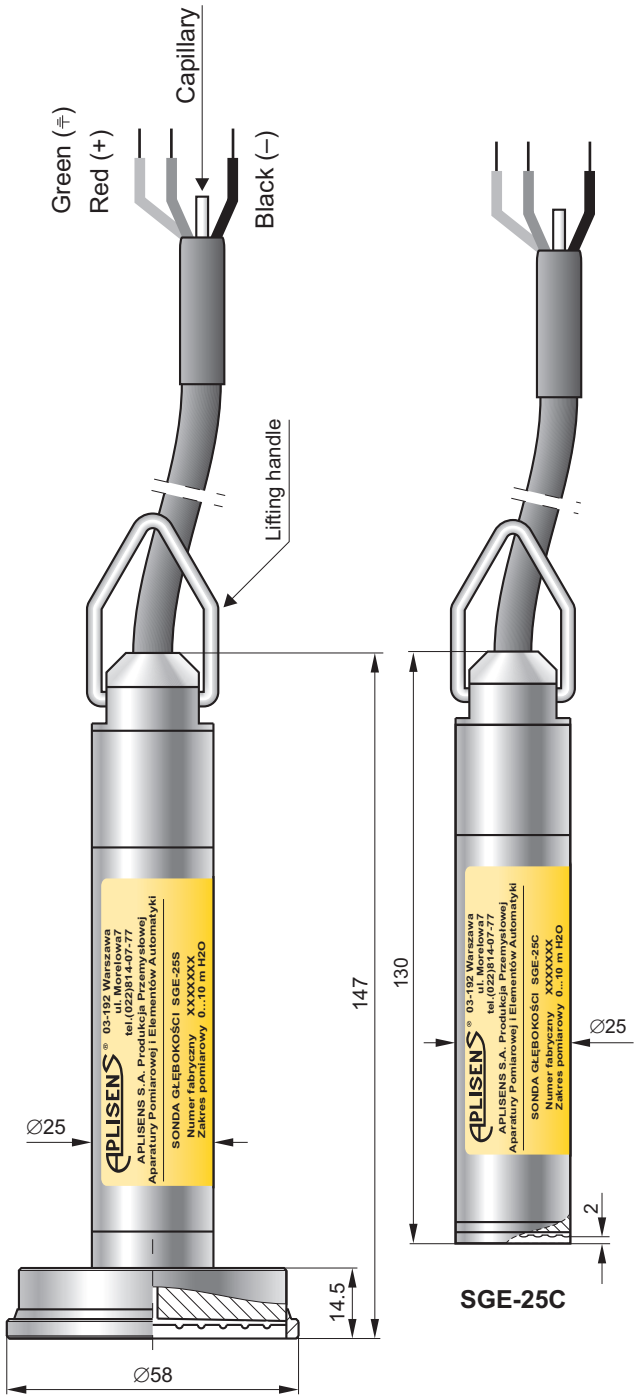

Application

The SGE-25S and SGE-25C probes are applicable to measure levels of liquids containing contaminants or suspensions. A typical use for this probe is the measurement of levels of liquid waste in intermediate pumping stations, fermentation chambers, settling tanks etc.

Principles of operation, design

The probe measures liquid levels, basing on a simple relationship between the height of the liquid column and the resulting hydrostatic pressure. The pressure measurement is carried out on the level of the separating diaphragm of the immersed probe and is related to atmospheric pressure through a capillary in the cable.

The use of a special separator with a large uncovered diaphragm minimizes the metrological effect of sediment deposit on the diaphragm surface. This enables the probe long lifetime and proper work in contaminated media (even in the presence of abrasives, such as sand) and facilitates cleaning with delicate stream of running water (washing with water under pressure may damage the probe).

The active sensing element is a piezoresistant silicon sensor separated from the medium by an isolating diaphragm. The electronic amplifier, which works in combination with the sensor, and is meant to standardize the signal, is additionally equipped with an overvoltage protection circuit, which protects the probe from damage caused by induced interference from atmospheric discharges or from associated heavy current engineering appliances.

Installation, method of use

When lowered to the reference level, the probe may either hang freely on the cable or lie on the bottom of the tank. The cable with the capillary can be extended using a standard signal cable. For the cable connection a special Aplisens **SG** cable hanger is recommended. The cable connection should be situated in a non-hermetically sealed box (the internal pressure inside the box should be equal to the atmospheric pressure), preventing water or other contaminants from getting into the capillary. The Aplisens **PP** junction box is recommended For systems with long signal transmission lines, it is recommended the using of an additional Aplisens UZ-2 overvoltage protection circuit in the form of a wall-mounted box which allows the cables connection. When the probe cable is being wound up, the minimum winding diameter should be 30cm and the cable should be protected from mechanical damage.

If there is a possibility of turbulence in the tank (for example, because of the mixer operating mixers or a turbulent inflow), the probe should be installed inside a screening tube (e.g. made of PVC). The line hooked on the lifting handle can simplify the operation of the probe pulling out. Cleaning the probe diaphragm by mechanical means is strictly prohibited.

Technical data

Any measurement range 2 ÷ 20 m H_2O

	Measuring Range		
	2,5 m H_2O	**4 m H_2O**	**0...10 m H_2O ÷ 20 m H_2O**
Overpressure Limit (repeatable – without hysteresis)	20 × range	20 × range	10 × range
Accuracy % FSO acc. to IEC 60770	1%	1%	0,5%
Accuracy % FSO acc. to BFSL	0,75%	0.5%	0,25%
Thermal error of zero	Typical 0,4% / 10°C max 0,6% / 10°C		Typical 0,2% / 10°C max 0,3% / 10°C
Thermal error of span	Typical 0,3% / 10°C max 0,4% / 10°C		Typical 0,2% / 10°C max 0,3% / 10°C

Hysteresis, repeatability 0,05%

Thermal compensation range 0 ÷ 40°C – standard
-10 ÷ 70°C – special version

Medium temperature range -30 ÷ 40°C - standard
0 ÷ 80°C – ETFE and PTFE version

CAUTION: The medium must not be allowed to freeze in the immediate vicinity of the probe

Electrical parameters

Output signal 4 ÷ 20 mA, two wire transmission
Special version: 0 ÷ 10 V three wire transmission (not applicable to Ex)

Load resistance (for current output)

$$R\,[\Omega] \le \frac{U_{sup}\,[V] - 8V}{0{,}02\,A}$$

Load resistance (for supply output) $R \ge 20k\Omega$

Power supply 8 ÷ 36 VDC (Ex: 9…28 VDC)
13 ÷ 30 VDC (for 0 ÷ 10 V output)

Error due to supply voltage changes variation 0,005% / V

Degree of protection IP-68
Material of casing and diaphragm
SG-25S (casing SS316L, diaphragm SS316L /option Hastelloy C/)
SG-25C (casing SS316L, diaphragm SS316L)
Cable shielding PU, ETFE, PTFE

Ordering procedure

Model	Code	Description
SGE-25C SGE-25S		Level probe
Versions, certificates	/Exia…… /MR…… /-10÷70°……	II 1G Ex ia IIC T4/T5/T6 Ga II 1G Ex ia IIB T4/T5/T6 Ga (for probe with cable in PTFE shield) I M1 Ex ia I Ma Marine certification (DNV), only with ETFE cable Extended thermal compensation range
Measuring set range	/…÷… [required units]	Calibrated range in relation to 4mA and 20mA (or 0V and 10V) output
Output signal	/4…20mA…… /0…10V……	4…20mA / power supply: 8…36VDC (Exia 9…28VDC, TR 10,5…36VDC) 0…10V / power supply 13…30VDC
Type of cable	/PU…… /ETFE…… /PU + PTFE…… /ETFE + PTFE……	Polyurethane cable (medium temp. up to 40°C) ETFE cable (medium temp. up to 75°C) Polyurethane cable with PTFE shielding (medium temp. up to 75°C) ETFE cable with PTFE shielding (medium temp. up to 75°C)
Cable length	/L=…m……	Cable length (standard: 5m, 10m, 12m, 15m, 20m, 25m other length on request)
Accessories	/SG…… /PP……	Cable hanger Junction box

Smart level probe
SGE-25.Smart

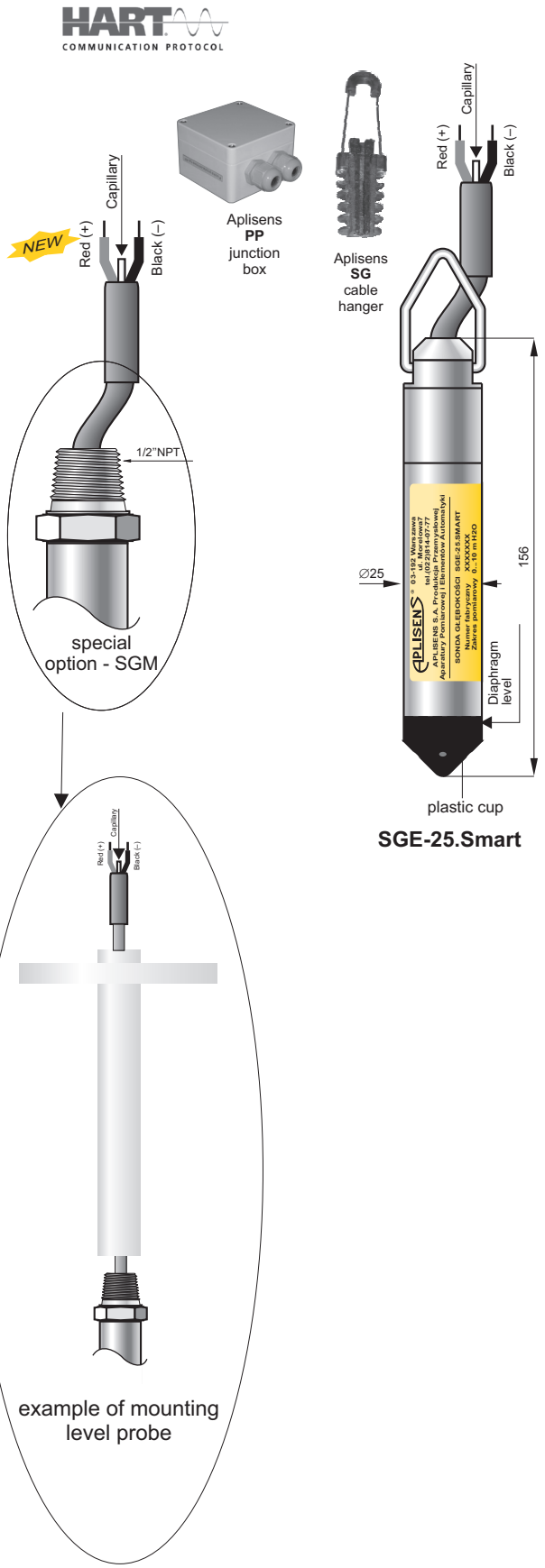

- ✓ **Programmable zero shift, range and damping ratio**
- ✓ **4...20 mA output signal + HART protocol**
- ✓ **Accuracy 0.1%**
- ✓ **Integrated internal overvoltage protection circuit**
- ✓ **ATEX Intrinsic safety**
- ✓ **Marine certificate DNV**

Application

The SGE-25.Smart level probe is applicable to measure liquid levels in tanks, deep wells or piezometers.

Principles of operation, construction

The probe measures liquid levels, basing on a simple relationship between the height of the liquid column and the resulting hydrostatic pressure. The pressure measurement is carried out on the level of the separating diaphragm of the immersed probe and is related to atmospheric pressure through a capillary in the cable.

The active sensing element is a piezoresistant silicon sensor separated from the medium by an isolating diaphragm. The electronic amplifier, which works in combination with the sensor, is additionally equipped with an overvoltage protection circuit, which protects the probe from damage caused by induced interference from atmospheric discharges or from associated heavy current engineering appliances.

Configuration

The following metrological parameters can be configured:

- ♦ the units of pressure;
- ♦ start and end-points of set range;
- ♦ damping time constant;
- ♦ inverted characteristic (output signal 20 ÷ 4 mA).

Calibration

It is possible to calibrate the probe in relation to a model pressure.

Communication

The communication standard for data interchange with the probe is the Hart protocol.

Communication with the probe is carried out with:

- – a KAP-03 communicator,
- – some other Hart type communicators,
- – a PC using an HART/USB converter and RAPORT 2 configuration software.

The data interchange with the probe also enables the users to:

- ♦ identify the probe;
- ♦ read the currently measured hydrostatic pressure value, output current and percentage of measuring range.

Installation, method of use

When lowered to the reference level, the probe may either hang freely on the cable or lie on the bottom of the tank. The cable with the capillary can be extended using a standard signal cable. For the cable connection a special Aplisens **SG** cable hanger is recommended. The cable connection should be situated in a non-hermetically sealed box (the internal pressure inside the box should be equal to the atmospheric pressure), preventing water or other contaminants from getting into the capillary. The Aplisens **PP** junction box is recommended For systems with long signal transmission lines, it is recommended the using of an additional Aplisens UZ-2 overvoltage protection circuit in the form of a wall-mounted box which allows the cables connection. When the probe cable is being wound up, the minimum winding diameter should be 30cm and the cable should be protected from mechanical damage.

If there is a possibility of turbulence in the tank (for example, because of the mixer operating mixers or a turbulent inflow), the probe should be installed inside a screening tube (e.g. made of PVC). The line hooked on the lifting handle can simplify the operation of the probe pulling out. Cleaning the probe diaphragm by mechanical means is strictly prohibited.

Measuring ranges

No.	Nominal measuring range (FSO)	Minimum set range	Overpressure limit (without hysteresis)
1	0…1,5 m H_2O	0,15 m H_2O	15 m H_2O
2	0…10 m H_2O	0,8 m H_2O	100 m H_2O
3	0…100 m H_2O	8 m H_2O	700 m H_2O

Technical data

Metrological parameters

Accuracy ≤ ±0,1% for nominal range
SGE-25.Smart ≤ ±0,3% for range 0...10% FSO

Long term stability ≤ 0,1% (FSO) for 2 years

Thermal error < ±0,08% (FSO) / 10°C
max ±0,2% in the whole compensation temp. range

Thermal compensation range -25...80°C

Response time 22 ms

Additional electronic damping 0...30s

Error due to supply voltage changes 0,002% (FSO) / V

Electrical parameters

Power supply 7,5...55 VDC (Ex 7,5...28 VDC)

Output signal 4...20 mA (two wire transmission)

Load resistance $R[\Omega] \le \frac{U_{sup}[V] - 7{,}5V}{0{,}0225A}$

Resistance required for communication >240 Ω

Operating conditions

Medium temperature range -30...40°C
ETFE or PTFE version: 0...80°C

CAUTION: The medium must not be allowed to freeze in the immediate vicinity of the probe.

Degree of protection IP68
Material of casing SS316L
Material of diaphragm Hastelloy C276 (optionally: SS316L)
Cable shield PU, ETFE, PTFE

Ordering procedure

Model	Code	Description	
SGE-25.Smart		Smart level probe	
Versions, certificates	/Exia……	Ex II 1G Ex ia IIC T4/T5/T6 Ga I M1 Ex ia I Ma Ex II 1G Ex ia IIB T4/T5/T6 I M1 Ex ia I Ma	Version with PTFE cable shielding
	/SGM……..	Version with thread on packing gland	
	/MR……..	Marine certificate (DNV), only with ETFE cable	
	/316L……	Membrane material: 316L	
Nominal measuring range		Range	Min. set range
	/0…1,5 m H2O……..	0…1,5 m H2O	0,15 m H2O
	/0…10 m H2O……..	0…10 m H2O	0,8 m H2O
	/0…100 mH2O……..	0…100 mH2O	8 m H2O
Measuring set range	/…÷… [required units]	Calibrated range in relation to 4mA and 20mA output	
Cable	/PU……	Polyurethane cable (medium temp. up to 40°C)	
	/PU PZH……	Polyurethane, halogen free cable with hygienic certification (medium temp. up to 40°C)	
	/ETFE……	ETFE cable (not suitable for mineral oil products, medium temp. up to 80°C)	
	/ETFE-R……	ETFE cable with Viton/silicon sealing (suitable for mineral oil products, medium temp. up to 40°C)	
	/PU + PTFE……..	Polyurethane cable with PTFE shielding (medium temp. up to 80°C)	
	/ETFE + PTFE……	ETFE cable with PTFE shielding (medium temp. up to 80°C)	
	L=…m	Cable length (standard: 5m, 10m, 12m, 15m, 20m, 25m other length on request)	
Accessories	/SG……..	Cable hanger	
	/PP……..	Junction box	

Smart level probe
SGE-25.Modbus

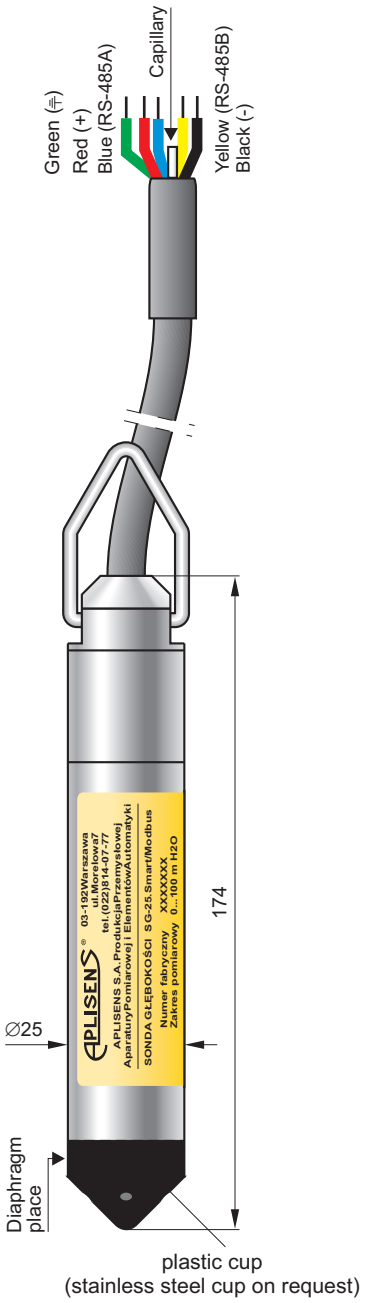

SGE-25.Modbus

Communication

Level probes with communication protocol RS485/Modbus RTU. The communication standard for data interchange with the transmitter is the RS485/Modbus RTU. Communication with the transmitter is carried out with PC using RS converter and Aplisens software.

Technical data*

Metrological parameters

Accuracy	≤ ±0,1%
Long-term stability (for nominal range)	≤ accuracy for 3 years
Thermal error	< ±0,1% (FSO) / 10°C max ±0,4% (FSO) in the whole compensation range
Thermal compensation range.	-25...80°C (other range on request)
Additional electronic damping	0...30 s

Electrical parameters

Power supply	in Modbus mode: 4…28 V DC Exia version: 4…10 V DC in 4…20mA mode (only non Exia version): 5..28 V DC
Transmission range	1200 m
Output	MODBUS RTU + 4..20 mA
Address space	1...247 devices address
Transmission speed	600...115200 bps
Parity transmission	no parity, odd, even
frame transmission	10...11 bit (1, 2 bit-stop)

*more information about technical data available in user's manual

Special version

◊ **Teflon** – teflon cable shielding

Ordering procedure

SGE-25.Modbus /___/___/___/ L = ... m

Spec. Version: Exia

Set range

Cable type:
PU, ETFE, ETFE-R, PU+PTFE, ETFE + PTFE

Cable length
(standard: 5m, 10m, 12m, 15m, 20m, 25m
other lengths on request)

Example: level probe SGE-25.Modbus, PU cable + PTFE shielding , set range 0 ÷ 10 m H_2O, cable length 10 m
SGE-25. Modbus / 0 ÷ 10 m H_2O / PU + PTFE / L = 10 m

Smart level transmitter type APC-2000ALW/L

- ✓ Programmable zero shift, range and damping ratio
- ✓ 4...20 mA output signal + HART protocol
- ✓ Accuracy 0,16%
- ✓ Local display
- ✓ Intrinsic safety certificate (ATEX, IECEx)

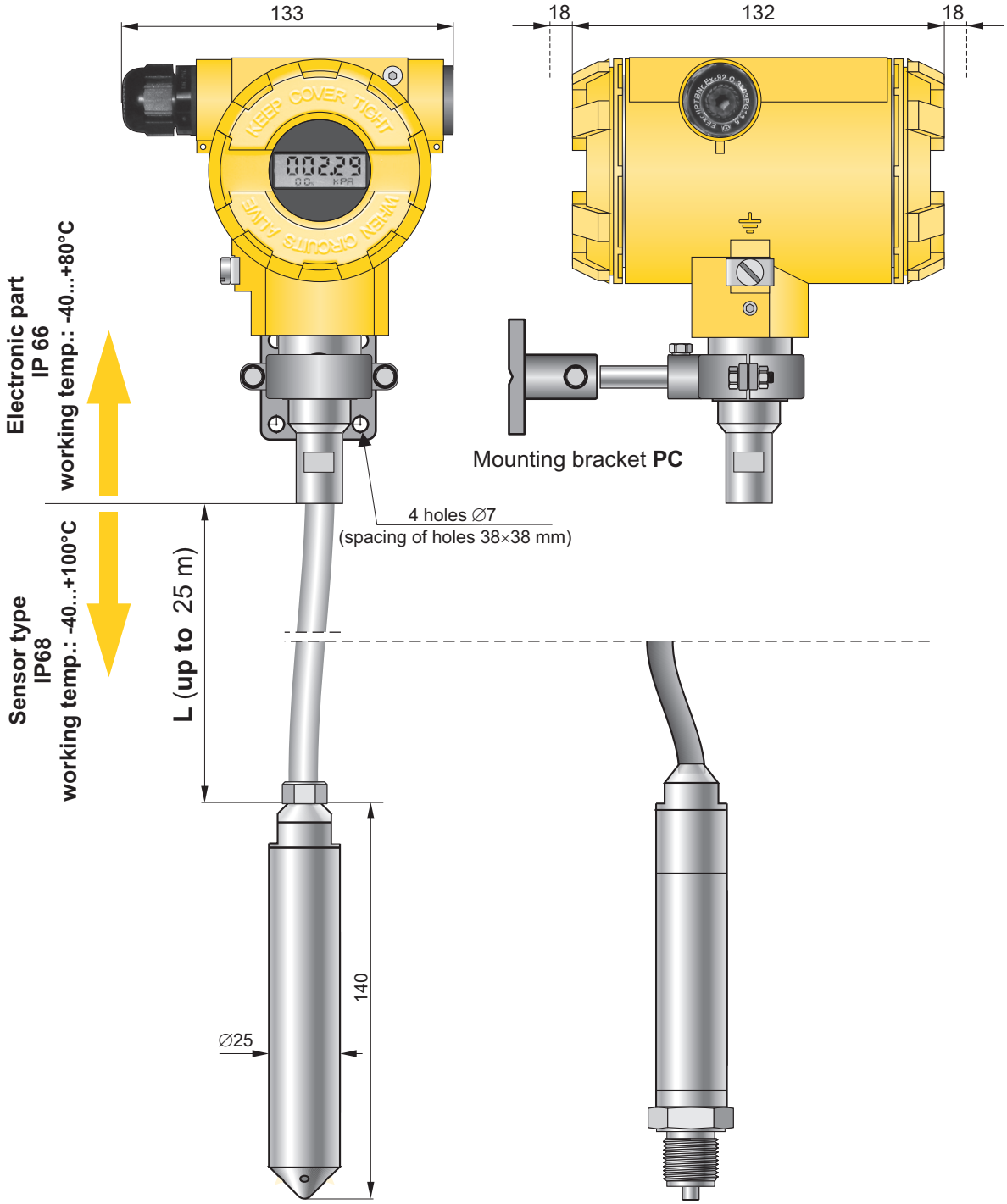

Submersible sensor
type SGE-25

Thread or flange mounted sensor
(Type of flange or thread has to be selected)

APC-2000ALW/L function:

- ☑ 4…20 mA output signal + HART protocol,
- ☑ Possibilities of the adjusting both zero point and of the start and end of the measuring range, characteristic ete.with the display panel keys,

  Configurable display 5 digits with illumination (working temperature range –40…+85°C)

Measuring range

No	Nominal range (FSO)	Min. set range	Overpressure limit
1	0...20 m H_2O	2 m H_2O	0...200 m H_2O
2	0...10 m H_2O	1 m H_2O	0...100 m H_2O
3	0...2,5 m H_2O	0,5 m H_2O	0...25 m H_2O

**other measuring ranges on request*

Application

The APC-2000ALW/L level probe is applicable to measure liquid levels in tanks, deep wells or piezometers.

The APC-2000ALW/L probe is applicable to measure levels of liquids containing contaminants or suspensions. A typical use for this probe is the measurement of levels of liquid waste in intermediate pumping stations, fermentation chambers, settling tanks etc. Because in submersible part of level probe is mounted only measuring sensor level probe can be use for measurement hot liquids max. 100°C.

Configuration

The following metrological parameters can be configured:

- The units of pressure;
- Start and end-points of set range;
- damping time constant;
- inverted characteristic (output signal 20 ÷ 4 mA).

Communication

The communication standard for data interchange with the probe is the Hart protocol.

Communication with the probe is carried out with:

- KAP-03 communicator
- Raport 2 software or other Hart communication devices.

Technical data*

Metrological parameters

Accuracy ≤±0,16%

Long-term stability ≤0,16% for 2 years

Thermal error < ±0,1% (FSO) / 10°C
max. ±0,4% (FSO) in the whole compensation range

Thermal compensation range -25...100°C
-40...80°C special version

Output actualization time 0,5 s

Additional electronic damping 0...60 s

Error due to supply voltage changes 0,002% (FSO) / V

* more information about technical data available in user's manual.

Electrical parameters

Power supply 10...55 VDC (Exia: 10,5…30 VDC)

Output signal 4...20 mA 2-wires + Hart protocol

Resistance required for communication min. 240 Ω

Load resistance

Operating conditions

Operating temperature range (ambient temp.) -40...85°C

Medium temperature range:
PU, ETEFE-R version: 0...40°C
ETFE, PU+PTFE version: 0...80°C
ETFE+PTFE version: 0...100°C

$$R[\Omega] = \frac{U_{ZAS}[V] - 10V}{0{,}0225A}$$

Ordering procedure

Model	Code	Description
APC-2000ALW/L		Smart level probe
Sensor type	/SGE-25……	
Versions, certificates	/Exia……	Ex II 1/2G Ex ia IIB T4/T5 Ga/Gb II 1D Ex ia IIIC T105°C Da IECEx Ex ia IIC T4/T5 Ga/Gb Ex ia IIIC T105 C Da
	/-40…80°C……	Compensation range -40...80°C
Nominal measuring range	/0…2,5 m H2O……	Range: 0…2,5 m H2O; Min. set range: 0,5 m H2O
	/0…10 m H2O……	Range: 0…10 m H2O; Min. set range: 1 m H2O
	/0…20 mH2O……	Range: 0…20 mH2O; Min. set range: 2 m H2O
Measuring set range	/…+… [required units]	Calibrated range in relation to 4mA and 20mA output
	/PU……	Polyurethane cable (medium temp. up to 40°C)
	/PU PZH……	Polyurethane, halogen free cable with hygienic certification (medium temp. up to 40°C)
	/ETFE……	ETFE cable (not suitable for mineral oil products, medium temp. up to 80°C)
	/ETFE-R……	ETFE cable with Viton/silicon sealing (suitable for mineral oil products, medium temp. up to 40°C)
	/PU + PTFE……	Polyurethane cable with PTFE shielding (medium temp. up to 80°C)
	/ETFE + PTFE……	ETFE cable with PTFE shielding (medium temp. up to 100°C)
Cable	L=…m	Cable length (max. 25m)
Accessories	/PC……	Mounting bracket

Level switch type ERH

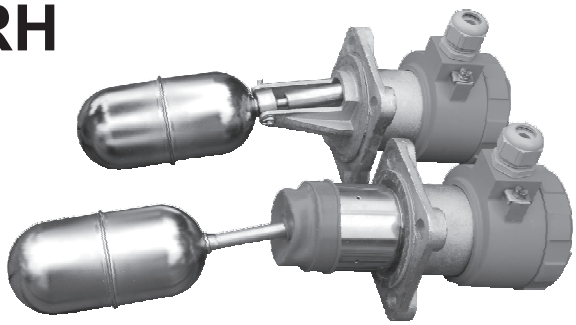

- ✓ **Explosion proof version**
- ✓ **Wetted parts material 316LSS**
- ✓ **Housing material: Aluminium or 316SS**
- ✓ **Housing protection IP66/68**
- ✓ **Nominal pressure 40bar**
- ✓ **Marine certificates (DNV-GL, LR, BV, PRS)**

Application

Float level switches are used for point level detection of liquids in all type of vessels. Operation without external power, side or top mounting, wide temperature and pressure ranges, various process connections, stainless steel wetted parts, Ex version and marine certificates make it a universally applicable level switch. Level switches are available with floats in two sizes: Ř64.5 x 130mm or Ř52 x 162mm)

Type	IP	ATEX	DNV-GL	LR	BV	PRS	PZH
ERH-xx-04	IP66						
ERH-xx-06	IP66		•	•	•	•	•
ERH-xx-07	IP68		•	•	•	•	
ERH-xx-16	IP66	•	•	•	•	•	
ERH-xx-16.1	IP68	•	•	•			

ERH-01-...
Side mounted

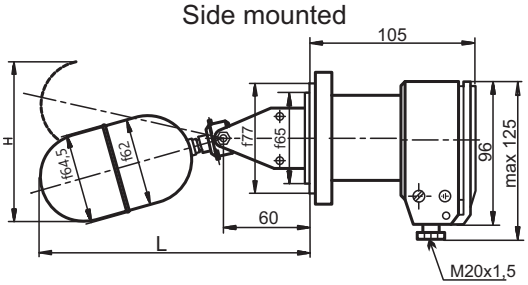

ERH-01-04, ERH-01-06, ERH-01-07
ERH-02-04, ERH-02-06, ERH-02-07

Symbol	H [mm]	L [mm]	Hysteresis [mm]
- 1	120	190	10
- 2	140	230	20
- 3	150	255	30

ERH-02-...
Side mounted (version with protection sleeve)

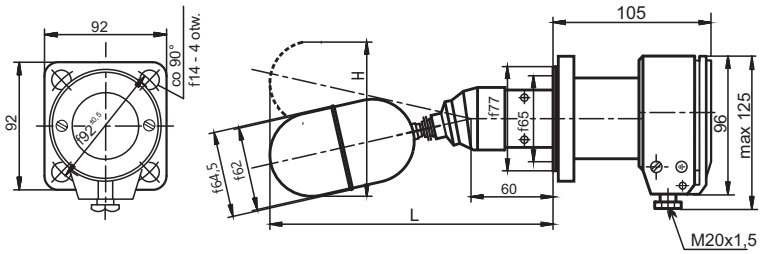

ERH-01-16, ERH-01-16.1
ERH-02-16, ERH-02-16.1

Symbol	H [mm]	L [mm]	Hysteresis [mm]
- 1	140	230	10
- 2	180	305	20
- 3	240	405	30

ERH-03-...
Side mounted (version with adjustable hysteresis)

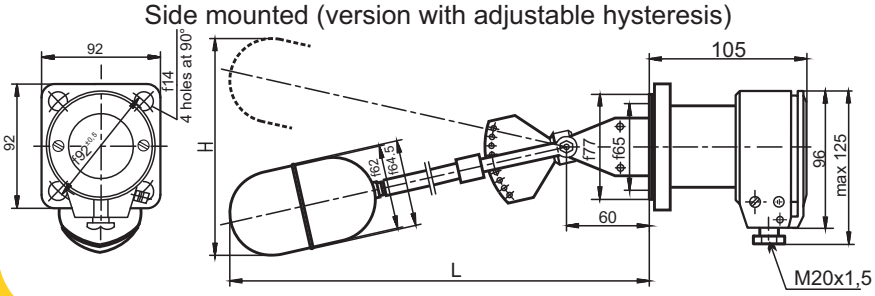

ERH-03-04, ERH-03-06, ERH-03-07

Symbol	H [mm]	L [mm]	Hysteresis [mm]
- 1	680	510	100...400
- 2	450	380	50...250

ERH-03-16, ERH-03-16.1

H [mm]	L [mm]	Hysteresis [mm]
680	510	50...400

ERH-04-...
Top mounted version

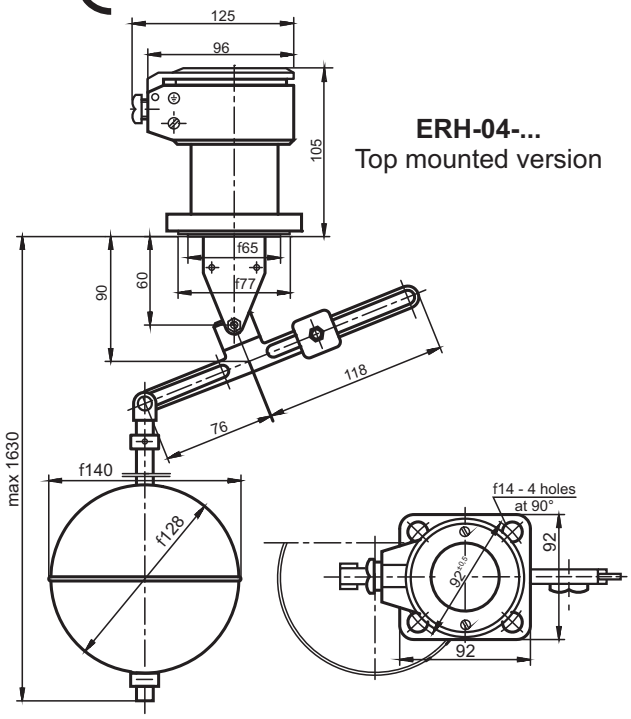

ERH-01-...-4-... / ERH-02-...-4-...
Top mounted version

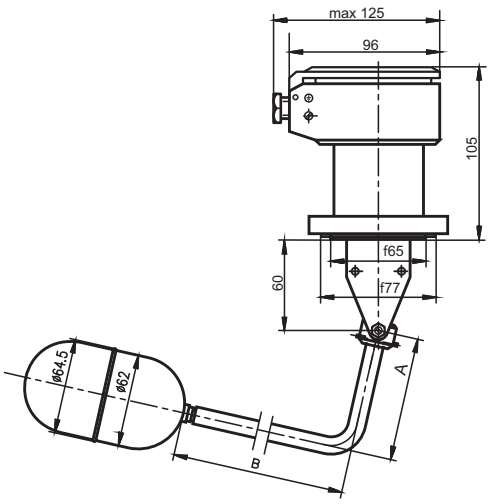

Technical data

Parameters		ERH-01-	ERH-02-	ERH-03-	ERH-04-
Hysteresis	ERH-xx-04, -06, -07	10, 20, 30 mm		50…250 mm 100…400 mm	32…1350 mm
	ERH-xx-16, -16.1			50…400 mm	
Repeatability		±15%		±15%..±2% depending on the range	
Min. medium density		0,60 g/cm^3			
Max. process pressure	ERH-xx-04, -06, -16	4,0 MPa			1,6 MPa
	ERH-xx-07, -16.1	0,2 MPa			
Max. medium temperature	ERH-xx-04, -06	250°C			
	ERH-xx-16	100°C			
	ERH-xx-07, -16.1	70°C			
Ambient temperature		-25…+70°C			
Ingress Prdection	ERH-xx-04, -06, -16	IP66			
	ERH-xx-07, -16.1	IP68			
Weight	ERH-xx-yy	1,8 kg	2,0 kg	2,1 kg	3,0 kg
	ERH-xxK-yy	2,6 kg	2,8 kg	2,9 kg	3,8 kg
	1m of cable	0,2 kg			
Explosion-proof	ERH-xx-16, -16.1	Ex II 1/2G c Ex de IIBT4 Ga/Gb			
Application		Liquids without contaminations by solid suspensions			Liquids without contaminations and contaminated by solid suspensions
Electric parameters	ERH-xx-04, -06, -07	AC15* U ≤ 230V; (50…60)Hz; I ≤ 10A; durability of contacts ≥ 3x10^5 DC13** U ≤ 220V; I < 0,6A; durability of contacts ≥ 0,3x10^5 Minimum voltage and switching current 10V; 20mA Cross section of connecting cables: one-wire 1…2,5mm^2 multi-wire 0,75…1,5mm^2			
	ERH-xx-16, -16.1	AC15* U ≤ 230V (50…60)Hz; I ≤ 2,5A; durability of contacts ≥ 0,85x10^5 DC13** U ≤ 220V; I < 0,3A; durability of contacts ≥ 0,3x10^5 Minimum voltage and switching current 10V; 20mA Cross section of connecting cables: one-wire 1mm^2 multi-wire 1mm^2			

Category of usage: * acc. to PN-EN 60947-5-1, Electromagnet control (>72VA); ** acc. to PN-EN 60947-5-1, Electromagnet control

Accessories

Counterflange type **ER2-1646**

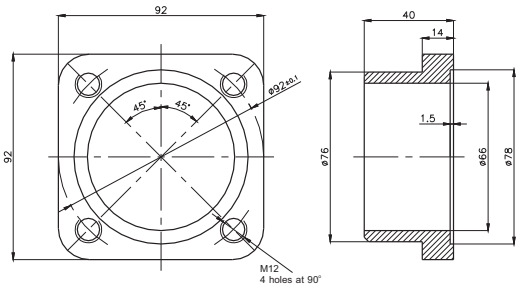

Assembly chamber **ER3-1631**

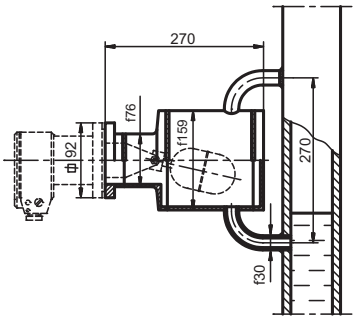

Tester **ER3-1495**

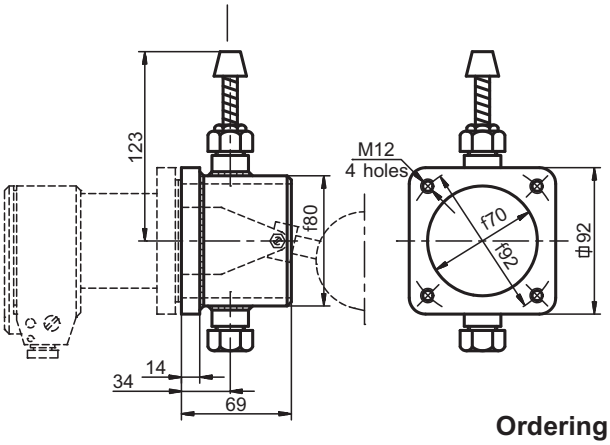

Tester **ER3-1560**

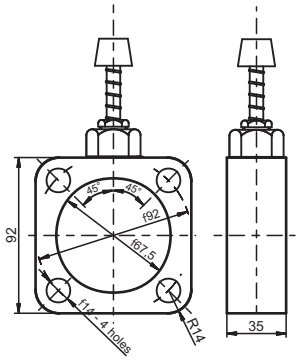

Ordering procedure

Model	Code			Description
ERH				Level switch
Constructional version	-01			Standard version
	-02			Version for contaminated liquids with protection sleeve
	-03			Version with adjustable hysteresis
	-04			Top mounting version
Version/certificate	-04			IP66, standard version
	-04K			IP66, standard version, SS version
	-06			IP66, marine approval, hygienic approval
	-06K			IP66, marine approval, hygienic approval, SS version
	-07			Submersible version IP68
	-07K			Submersible version IP68, SS version
	-16			IP66, explosion proof version
	-16K			IP66, explosion proof version, SS version
	-16.1			Submersible version IP68, explosion proof version
	-16.1K			Submersible version IP68, explosion proof version, SS version
Floating arm length/ hysteresis	Options for ERH-01 and ERH-02 only	-1		Hysteresis h=10mm
		-2		Hysteresis h=20mm
		-3		Hysteresis h=30mm
		-4-0		Floating arm length A=125mm, B=125mm
		-4-1		Floating arm length A=185mm, B=80mm
		-4-2		Floating arm length A=250mm, B=125mm
		-4-3		Floating arm length A=140mm, B=120mm
		-4-4		Floating arm length A=100mm, B=120mm
		-4-5		Floating arm length A=120mm, B=80mm
		-4-6		Floating arm length A=150mm, B=80mm
		-4-Y		Floating arm length on request (please specify A and B)
	Options for ERH-03 only	-1		Adjustable hysteresis min 100mm, max 400mm
		-2		Adjustable hysteresis min 50mm, max 250mm
				for ERH-03-16 and ERH-03-16.1 hysteresis min 50mm, max 400mm
Cable		-1		Without cable
		-2		With cable L= …m (standard 3m, other length on request,)
Accessories			/ER3-1560-1	Testing equipment (material: St3S)
			/ER3-1560-2	Testing equipment (material: 316Lss)
			/ER3-1495	Testing equipment to weld in a tank
			/ER2-1646-1	Counter flange (material: St3S)
			/ER2-1646-2	Counter flange (material: 316Lss)
			/ER3-1631	Assembly chamber
			/DN80	Process connection flange DN80
			/ANSI 3”	Process connection flange ANSI 3” 150LB

Float level switch ERH-SMALL

- ✓ **Small in-tank dimensions**
- ✓ **Standard flanged mounting 92x92**
- ✓ **High reliability switching**
- ✓ **Several options e.g. fully stainless steel, IP66/IP68, ATEX**

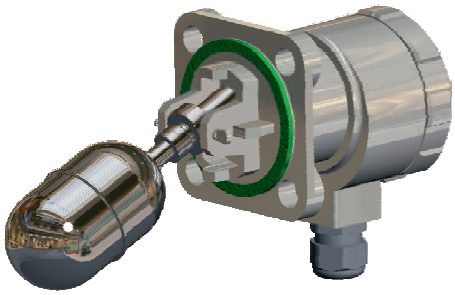

Description

The limit level signalling or two-term liquid level control in the open or closed pressure tanks. The level switches can operate in neutral liquids, or aggressive ones not acting on stainless steel (316 SS).

Technical data

Minimum S.G.	0,70 g/cm^3
Maximum pressure	4,0 MPa
- for operation at full submersion	0,2 MPa
Operating temperature	80°C
- for operation at full submersion	70°C
Ambient temperature	-25 °C…+ 70°C
Electric rating	
- standard versions	400 V AC; 10A 220 V DC; 0,6A
- Ex versions	230 V AC; 2,5A 220 V DC; 0,3A
Histeresis	20mm
- Ex versions	15mm
Protection enclosure	IP66
- for operation at full submersion	IP68
Wetted parts material	316L SS
Housing material	Al alloy or 316 SS (see table)
Weight	1,8kg or 2,6kg (fully SS)

Microswitches

Electrical diagram standard version:
ERH-01-06- and -07

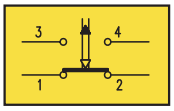

Microswitch **83 140**
(silver plated contacts)

Electrical diagram Ex version:
ERH-01-16- and -16.1-

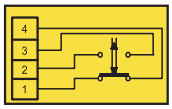

Microswitch Ex version
ER3-1536

Dimensions

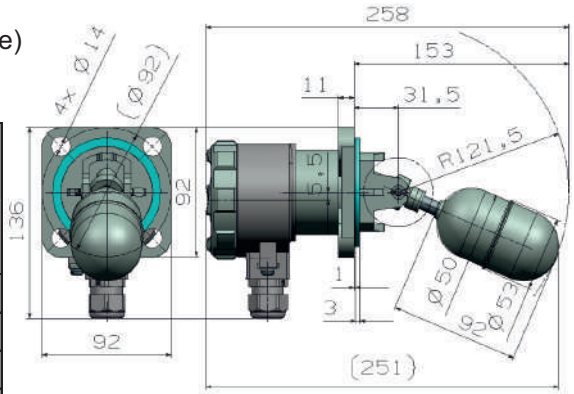

For mounting ERH-SMALL
we suggest to use the counter flages
(optional equipment):
- **ER2-1646-1** (carbon steel)
- **ER2-1646-2** (stainless steel)

Screws and nuts in set.

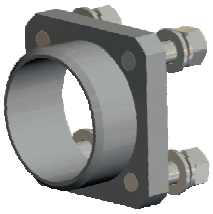

Ordering

Code	Wetted parts	Housing	Protection	ATEX Certificate
ERH-01-06-SMALL	316L	Al alloy	IP66	
ERH-01-06-K-SMALL	316L	316	IP66	
ERH-01-07-SMALL	316L	Al alloy	IP68	
ERH-01-07-K-SMALL	316L	316	IP68	
ERH-01-16-SMALL	316L	Al alloy	IP66	☑
ERH-01-16-K-SMALL	316L	316	IP66	☑
ERH-01-16.1-SMALL	316L	Al alloy	IP68	☑
ERH-01-16.1-K-SMALL	316L	316	IP68	☑

** ATEX Ex II 1/2G c Ex de IIB T4 Ga/Gb*

Order example

Fully stainless steel level switch with IP68 housing protection degree,
including stainless steel counter flange: **ERH-01-07-K-SMALL + ER2-1646-2**

Bilge level switch ERH-11-20

Features

- 4 **Designed for dirty liquids**
- 4 **High reliability switching**
- 4 **Several options e.g. protectiv casing, test devices and other**
- 4 **Fully stainless steel (316L)**
- 4 **Protection class IP68**
- 4 **Marine approval DNV-GL**

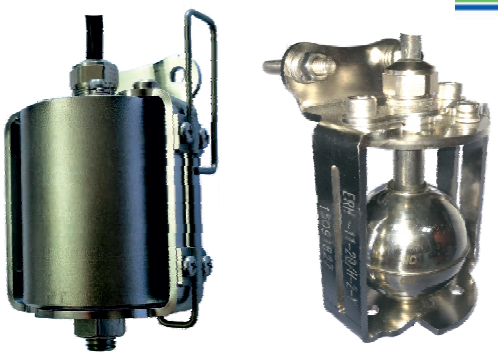

Description

The ERH-11-20 switches are designed for general purpose on ships - especially for bilges and other places with difficult conditions - and in other industries. These Switches are resistant to mechanical damage thanks to their solid housing. The 3mm thick housing is much stronger as that of competing switches. This ensures long service life.

Technical data

Minimum S.G.	0,70 g/cm^3
Maximum pressure	1,2 MPa
Temperature	-25 °C…+ 80°C
Switching point	approx. in the middle of the switch pipe
Electric rating	230 V AC; 100VA; 1A 223 V DC; 50W; 0,5A
Realized functions	open, close, change-over
Electrical connection	cable 3m (standard)
Installation type	cable up (with test device) cable up or down (others)
Protection class	IP68
Material	316L SS

Dimensions

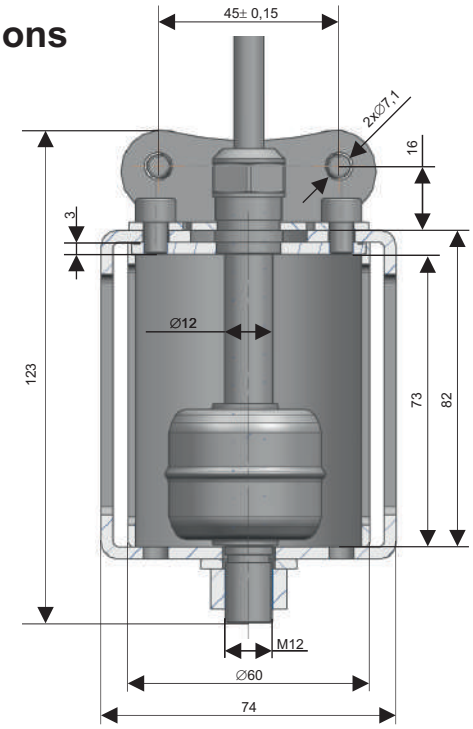

Electric diagram

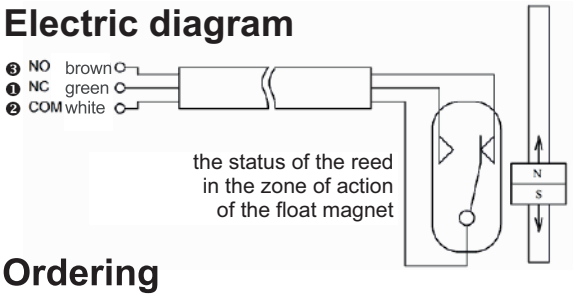

Ordering

ERH-11-20	Bilge level switch with mountain bracket	
	/H-2	Switching point approx. in the middle of switching pipe & electric connector with cable 3m *
	Additional options	
	-Y	With yoke / shackle
	-P	With protection of float
	-YP/Tester	With protection of float and test device

** other lengths of cable upon the order*

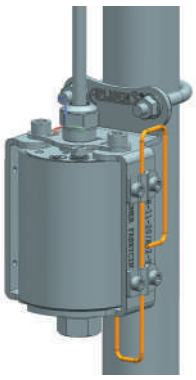

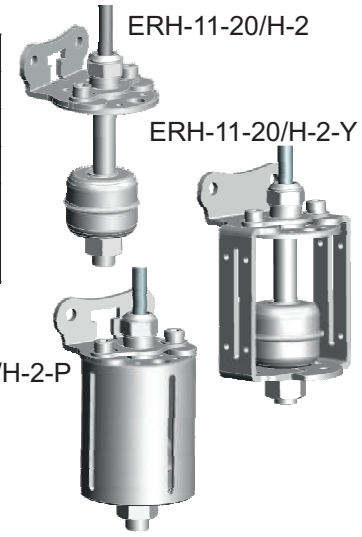

Order example

Bilge level switch with mountain bracket, cable 3m, protection of float and tester: **ERH-11-20/H-2-YP/Tester**

Magnetic level switch
ERH-xx-20

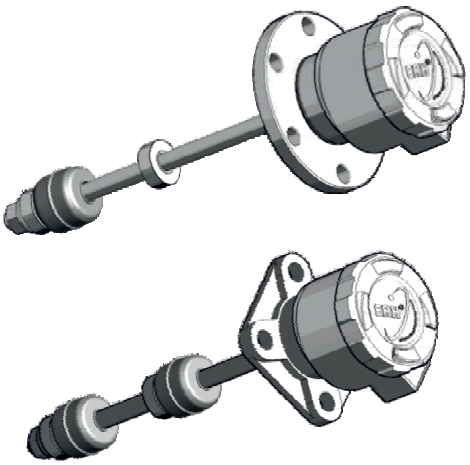

Level signalling of the medium having minimum density 0,70 g/cm^3. The basic version, mounted from the top, is available with 92x92mm flange connector, head made from aluminium alloy and M20x1,5 cable gland with casing protection degree IP68. Other versions of mechanic or threaded flange connectors according to the ordering code. There is also a possibility of ordering the level swicth with connector according to the requirements, e. g. with flange acc. to DIN or ANSI standard. The level switch can also be ordered in version fully made from acidproof steel, with additional cover protecting the float, made from stainless steel, with additional cover protecting the float, as well as with certified cable of optional length. The level switch has DNV GL Marine approval and ATEX certification.

Technical data

Min. medium density	0,70 g/cm^3
Max. process pressure	1,0 MPa
Ambient temperature	-25°C…+ 60°C
Medium temperature	-25°C…+ 80°C
Switching points	1,2 or 3
Switching rate *	230 V AC; 100VA; 1A 230 V DC; 50W; 0,5A
Hysteresis	10mm
Ingress Protection	IP68

Type of temp. senor	Pt100
ATEX	Ex II 2G Ex db IIC T3÷T6 Gb
Material of the wet part	316L
Material of the dry part	aluminum alloy or 316
Floating element	∅40x35mm
Protection tube	∅60
Weight of the level switch **	0,3...8,5 kg
Weight of the cable	0,15 kg/m

* maximum parameters of the reed relays apply to the loads of resistance character; for inductive loads such as relay coils, one should apply adequate protecting systems (detailed pieces of information in Operation Manual)
** it depends on the version

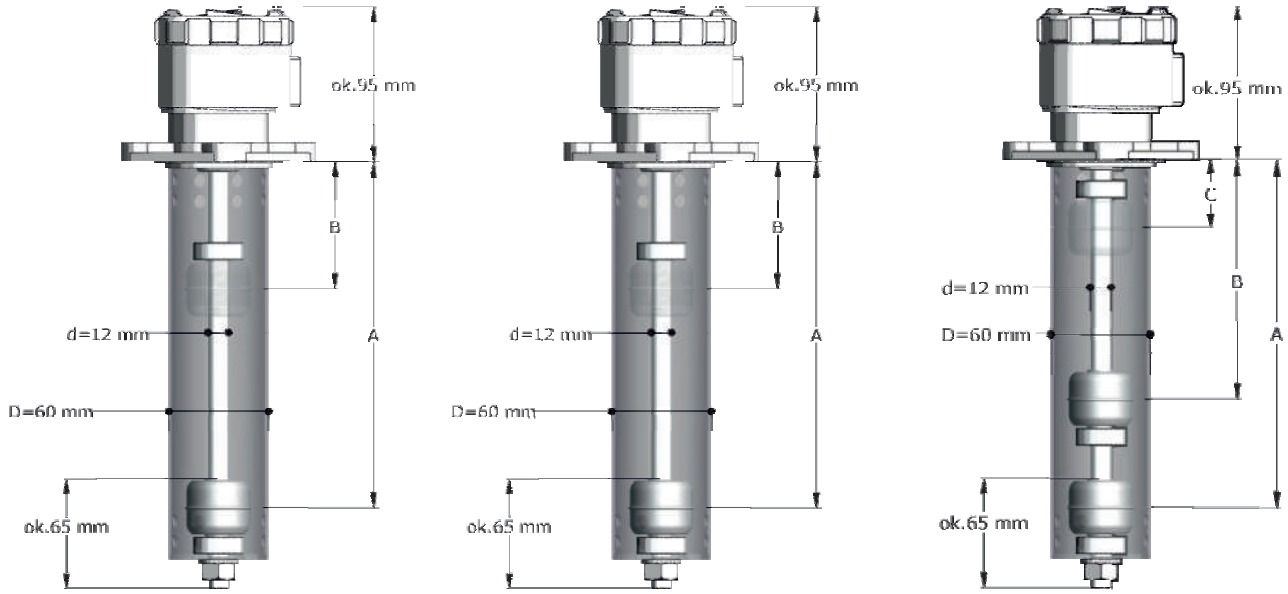

The dimensions A, B and C depend on the ordered version. For one signalling point: A min. 50mm, A max. 1000mm. For two signalling points: A min. 150mm, A max 1000mm; B min. 50mm, B max 900mm; (A – B) min. 100mm. For three signalling points: A min. 250mm, A max 1000mm; B min. 150mm, B max 900mm; C min. 50mm, C max 800mm; (A – B) min. 100mm, (B – C) min. 100mm.

Ordering procedure

ERH-02-20				Level switch with flange connector 92mm (4 holes ∅14/∅92mm)
ERH-04-20				Level switch with flange connector ∅120mm (6 holes ∅12/∅100mm)
ERH-06-20				Level switch with flange connector DN80PN40 (8 holes ∅18/∅160mm)
ERH-09-20				Level switch with threaded connector 2” NPT
ERH-XX-20				Level switch with connector according to the order
	/A/0/0			1 switching point (give value A in mm)
	/A/B/0			2 switching points (give values A and B in mm) *
	/A/B/C			3 switching points (give values A, B and C in mm) *
		-1		Electric connector IP68 without cable (not available with Ex option)
		-2		Electric connector IP68 with cable 3m length ** (not available with Ex option)
		-3		Electric connector ER2-1593 (IP68) with cable 3m length ** (not available with Ex option)
		-4		Electric connector IP68 with marking ATEX Ex d IIC
		-5		Electric connector without cable gland (thread M20x1,5)
			-K	Fully stainless steel version
			-P	With protection of float
			-T	With Pt100 sensor
			-PT	With protection of float and Pt100 sensor
			-KP	Fully stainless steel version with protection of float
			-KT	Fully stainless steel version with Pt100 sensor
			-KPT	Fully stainless steel version with protection of float and Pt100 sensor
			/Ex	ATEX version Ⓔx II 2G Ex db IIC T3÷T6 Gb

ERH-11-20			Level switch with mounting clamp (mini version - fully stainless steel)
	/H-2		1 switching point approximately in the middle of tube length + electric connector with cable 3m length **
		-Y	With yoke / shackle
		-P	With protection of float
		-YP	With yoke / shackle and protection of float
		-YP/Tester	With yoke / shackle, protection of float and tester

* the dimensions A, B and C depend on the ordered version; for one signalling point: A min. 50mm, A max. 1000mm; for two signalling points: A min. 150mm, A max 1000mm; B min. 50mm, B max 900mm; (A – B) min. 100mm; for three signalling points: A min. 250mm, A max 1000mm; B min. 150mm, B max 900mm; C min. 50mm, C max 800mm; (A – B) min. 100mm, (B – C) min. 100mm
** other lengths of cable upon the order

Float level switch ERH-01-18

- ✓ **Min/max signalization**
- ✓ **Range change possible by changing weight position**
- ✓ **Direct control of low power pumps**
- ✓ **Chemical resistance to most common media**
- ✓ **High mechanical and electrical resistance**

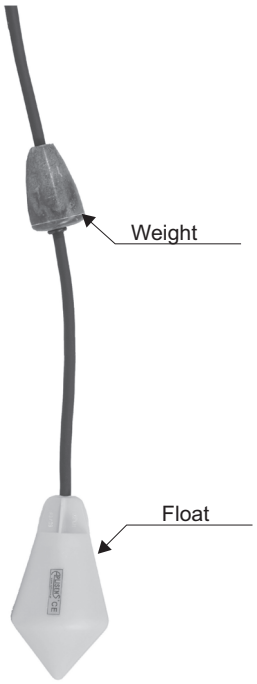

Technical data

Minimal signalization range	350mm ±15%
Max. medium temperature	85°C
Max. pressure	0,35 MPa
Nominal current I_{nc}	20 A
Power supply	250V AC-50/60Hz
Contacts	filling - black – blue emptying - black – brown
Ambient temperature	-25…+80°C
Ingress protection class	IP68
Cable length	10 or 20 m
Cable type	Neoprene HR HY H07RN8-F 3x1mm^2
Float material	Copolymer polypropylene
Additional accessories	Weight

Ordering procedure

ERH-01-18 / L = ... m/...

Cable length: 10 or 20 m — Optional: weight

Notes

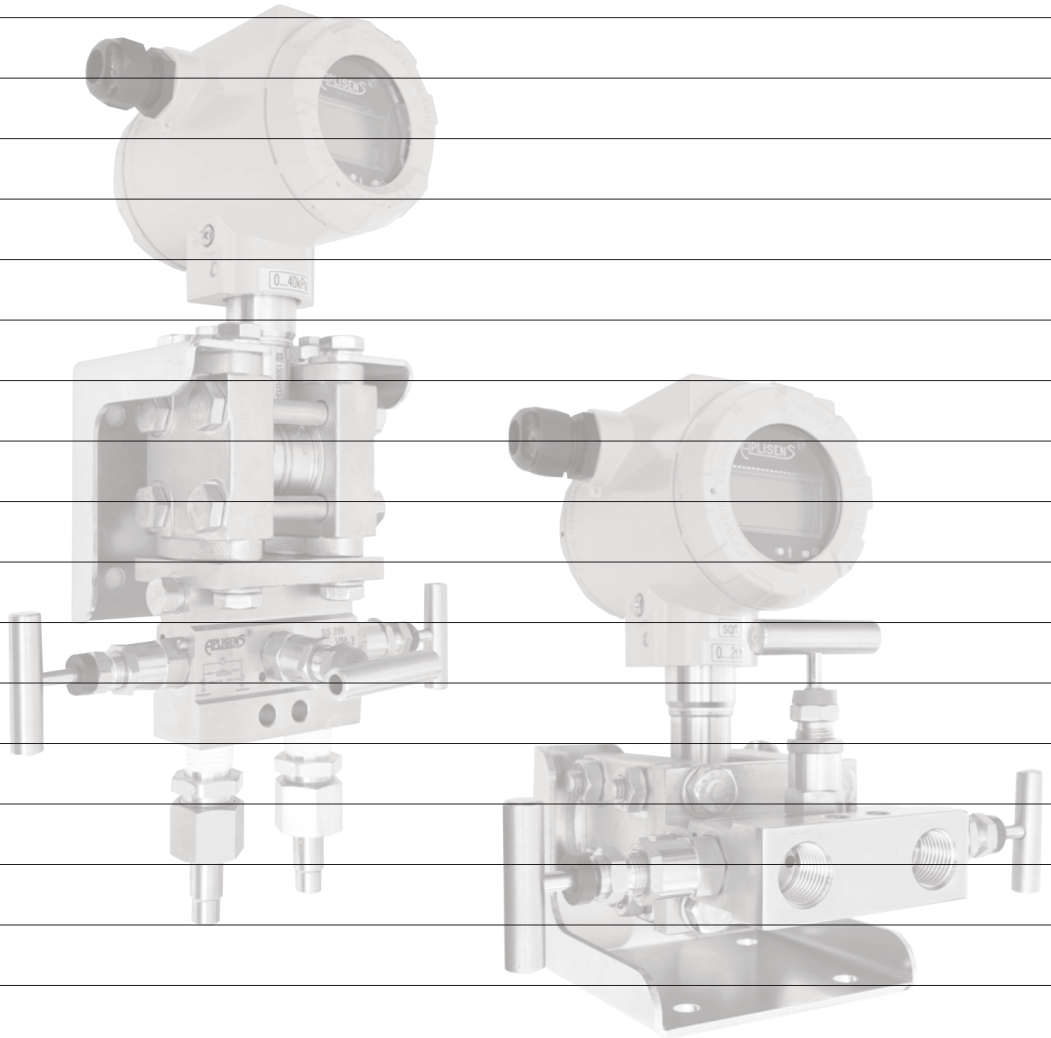

Chapter VI

Digital indicators

Multichannel controllers with data logging capabilities
type PMS-110R and PMS-111R.....VI/ 2

Data logger model PMS-90R.....VI/ 4

Display WW-11ALW ..... VI/ 6

Displays WW-11N and WW-45..... VI/ 7

Digital indicators with relay outputs
PMS-920..... VI/ 8

Digital indicator with relay outputs
PMS-970T..... VI/ 9

Digital indicator with relay outputs
PMS-970P ..... VI/ 10

Digital indicator with relay outputs
PMS-620N ..... VI/ 11

Multichannel controller with data logging capabilities type PMS-110R / PMS-111R

- ✓ compact multichannel controller with data logging capabilities
- ✓ analog / digital /universal inputs
- ✓ thermocouple / RTD inputs
- ✓ counter / flowmeter/ ratemeter inputs
- ✓ current or relay / SSR outputs
- ✓ USB Host port for flush data storage
- ✓ free configuration and recording software
- ✓ 3.5"/5.7 TFT, 320 x 240 pixels, touchscreen navigation

Application and functions

The data logger PMS-11..R is a powerful and versatile compact multichannel-controller with a capability to record data, if the recording function is requested and activated. Thanks to that it is one of the first industrial devices which integrates advanced control functions (PID, ON/OFF, time & profiles etc.) and logging of set points, excitations and current state of controlled objects. Based on Linux firmware, is stable and the touch screen makes configuration easy and comfortable and data presentation also readable and attractive. The device can simultaneously record all build-in logical channels, and is capable to record data with maximum speed 10Hz (ten samples per second, with some limitation of number of recorded channels). 2GB of internal data memory is enough for continuous recording of all channels with a speed of 1 sample per second (each channel) for over 50 days (250 000 000 samples in total). Version with 4BG. internal memory with the same configuration can storage data from 115 days. An operator can download stored data using a USB flash disk or via Ethernet.

Display configuration option

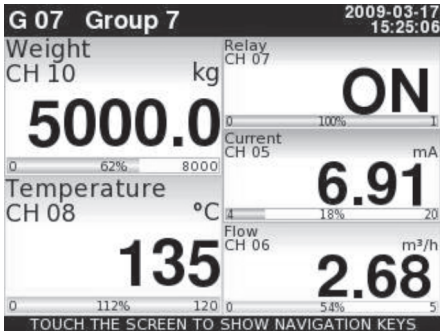

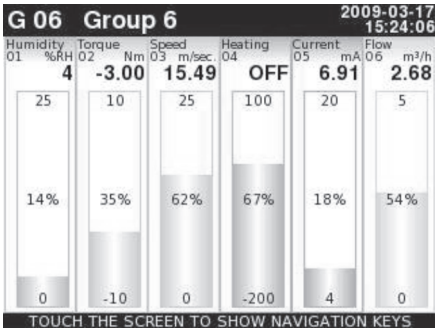

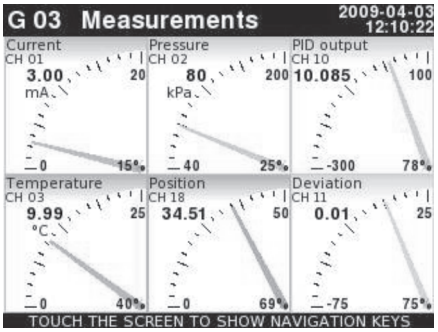

Technical data

Power supply: 19 ÷ 50V DC; 16 ÷ 35V AC or 85 ÷ 260V AC/DC
Power consumption: 15 VA typical; 20 VA max.
Communication interface:
standard: RS-485 (Modbus RTU), 1 x USB Host
with ACM module: 2 x RS-485, 1 x RS-485/232,1 or 2 x USB Host, 1 x Ethernet
with ETU module: 1 or 2 x USB Host, 1 x Ethernet
Protection:
IP 65 (front) for version without front USB, available with additional sealing frame IP 65 for panel,
IP 40 (front) for version with front USB
IP 54 (front) for version with front USB with add. transparent door
Data memory: internal 2 GB or 4GB
Working temperature: 0°C to +50°C (-20°C to +50°C as an option)
Storage temperature: -10°C to +70°C (-20°C to +70°C as an option)
Case style: panel mounting

PMS-110R
Display: 3.5" graphic TFT, 16-bit colour, 320 x 240 pixels, touchscreen navigation
Measuring inputs:
- 48 analogue inputs (0/4-20 mA, 0/1-5V or 0/2-10V) max.
- 48 digital inputs max.
- 24 Thermocouple inputs max. (J,K, S, T, N, R, B, E)
- 12 RTD inputs max.
- 12 universal inputs (U/I/RTD/TC/mV) max
- 12 counter inputs max
- 12 flowmeter/ratemeter inputs

Digital input: 1 x 24V DC, optocoupled
Sensor supply: 24 V DC ± 5% (200 mA max. for version with current inputs)
Outputs:
- 8 analog (4-20 mA)
- 16 relay (1A/250V)
- 4 relay 5A/250V max.
- 48 SSR outputs

Remote inputs and outputs available, via RS-485/Modbus RTU
Case dimensions: 96 x 96 x 100 mm
Panel cut-out dimensions: 90.5 x 90.5 mm
Installation depth: 102 mm min.
Panel thickness: 5 mm max

PMS-111R
Display: 5.7" graphic TFT, 16-bit colour, 320 x 240 pixels, touchscreen navigation
Measuring inputs:
- 72 analogue inputs (0/4-20 mA, 0/1-5V or 0/2-10V) max.
- 72 digital inputs max.
- 36 Thermocouple inputs max.(J,K, S, T, N, R, B, E)
- 18 RTD inputs max.
- 18 universal inputs (U/I/RTD/TC/mV) max
- 12 counter inputs max
- 18 flowmeter/ratemeter inputs

Digital input: 1 x 24V DC, optocoupled
Sensor supply: 24 V DC ± 5% (200 mA max. for version with current inputs)
Outputs: - 18 analog (4-20 mA) max
- 36 relay (1A/250V)
- 18 relay 5A/250V max
- 72 SSR outputs

Remote inputs and outputs available, via RS-485/Modbus RTU
Case dimensions: 144 x 144 x 100 mm
Panel cut-out dimensions: 138,5 x138,5 mm
Installation depth: 102 mm min.
Panel thickness: 5 mm max

Optional accessories

- USB/RS-485 converter
- RS-232/RS-485 converter

Transparent door with moulded frame with key

* R81 and R45 output modules of PMS-110R must be installed in slot C only.
If two relay output modules are needed than they must be installed in slots B and C.

Ordering code

PMS-110R
PMS-111R/___ /___ /___ /___ /___ /___ /___ /

Logging capability:
L1: With logging capabilities
L0: Without logging capabilities

Modules:
slot A: choose module
slot B: choose module
slot C: choose module

Power supply:
1. 19..50V DC or 16..35V AC
2. 85V...260V AC/DC

Internal memory:
empty: 2GB (standard version)
4GB: 4GB

Communication options:
AA: rear USB host
AB: front USB Host
AC: rear and front USB Host
BA: ACM module
BB: ACM module, front USB Host
CA: ETU module
CB: ETU module, front USB Host

Module	Description	PMS-110R			PMS-111R		
		Slot A	Slot B	Slot C	Slot A	Slot B	Slot C
P	empty slot	O	O	O	O	O	O
EFUN4	4 x universal inputs	O	O	O	O	O	O
EFUN6	6 x universal inputs	O	O	O	O	O	O
UN3	3 x universal inputs, isolated	O	O	O	O	O	O
UN5	5 x universal inputs, isolated				O	O	O
I16	16 x current input	O	O	O	O	O	O
I24	24 x current input				O	O	O
IS6	6 x current input, isolated	O	O	O	O	O	O
U16	16 x voltage input	O	O	O	O	O	O
U24	24 x voltage input				O	O	O
UI4	4 x voltage input + 4 x current input	O	O	O	O	O	O
UI8	8 x voltage input + 8 x current input	O	O	O	O	O	O
UI12	12 x voltage input + 12 x current input				O	O	O
UI4N8	4 x voltage inputs + 4 x current inputs + 8 x NTC inputs	O	O	O	O	O	O
UI4D8	4 x voltage inputs + 4 x current inputs + 8 x digital inputs	O	O	O	O	O	O
UI8N8	8 x voltage inputs + 8 x current inputs + 8 x NTC inputs				O	O	O
UI8D8	8 x voltage inputs + 8 x current inputs + 8 x digital inputs				O	O	O
RT4	4 x RTD input	O	O	O	O	O	O
RT6	6 x RTD input				O	O	O
TC4	4 x TC input	O	O	O	O	O	O
TC8	8 x TC input	O	O	O	O	O	O
TC12	12 x TC input				O	O	O
D8	8 x digital input, isolated	O	O	O	O	O	O
D16	16 x digital input, isolated	O	O	O	O	O	O
D24	24 x digital input, isolated				O	O	O
CP2	2 x pulse input (universal counters), isolated	O	O	O	O	O	O
CP4	4 x pulse input (universal counters), isolated	O	O	O	O	O	O
HM2	2 x hourmeters, isolated	O	O	O	O	O	O
HM4	4 x hourmeters, isolated	O	O	O	O	O	O
FT2	2 x pulse input (flowmeters / ratemeters) + 2 x current input	O	O	O	O	O	O
FT4	4 x pulse input (flowmeters / ratemeters) + 4 x current input	O	O	O	O	O	O
FI2	2 x current input (flowmeters) + 2 x current input	O	O	O	O	O	O
FI4	4 x current input (flowmeters) + 4 x current input	O	O	O	O	O	O
R81*	8 x SPST relay 1A output		O	O	O	O	O
R121	12 x SPST relay 1A output				O	O	O
R45*	4 x SPDT relay 5A output			O	O	O	O
R65	6 x SPDT relay 5A output				O	O	O
S8	8 x SSR output			O	O	O	O
S16	16 x SSR output			O	O	O	O
S24	24 x SSR output				O	O	O
IO2	2 x 4-20 mA output		O	O	O	O	O
IO4	4 x 4-20 mA output		O	O	O	O	O
IO6	6 x 4-20 mA output				O	O	O
IO8	8 x 4-20 mA output				O	O	O

Data logger type PMS-90R

- ✓ **Up to 8 I/U inputs or RTD/TC inputs**
- ✓ **1 digital input for recording release**
- ✓ **2 relay outputs in standard (optoMOS)**
- ✓ **USB Host port for flush data storage**
- ✓ **RS-485 / Modbus RTU**
- ✓ **Power supply 19V ÷ 50V DC, 85 ÷ 260V AC**
- ✓ **Free configuration and recording software**

Application and functions

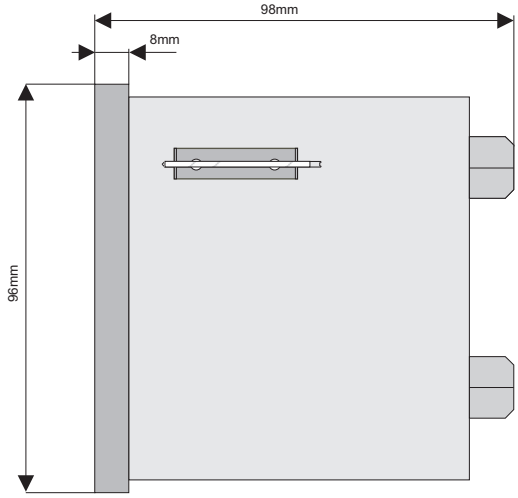

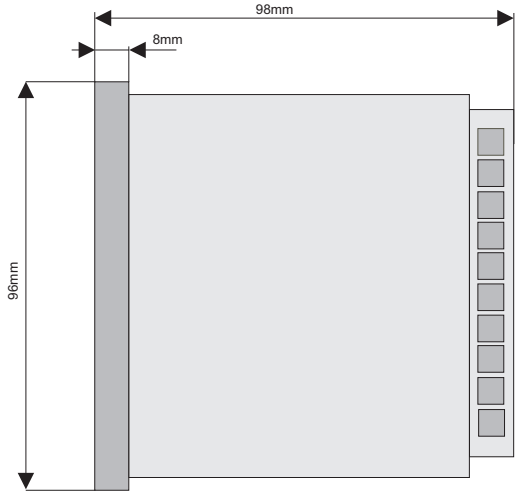

The industrial data logger PMS-90R is designed to record and display current values as well as to present technological parameters in the form of graphs. The devices is equipped with 1, 4 or 8 U/I inputs (0/4-20mA, 0/1-5V, 0/2-10V) or RTD/TC inputs (Pt100, Pt500, Pt1000, TC type K, S, J, T, N, R, B, E), one impulse (digital) input for controlling the recording process and one USB Host port for flash data storage. The device has the memory capacity of 8 MB in version with USB (3 000 000 data recordings).

The measurement results can be represented in various forms (numerical, analog, graphic) equally as a singular reading, series of readings, or a group of channels. The archive of registered data can be searched, and the results of the search can be represented in graphic or tabular form.

The PMS-90 has 6 keys on the front panel. Keys enable the PMS-90R configuration. The menu assisted with full text descriptions makes the unit configuration of process quite easy. The data logger is fitted for galvanic insulated RS-485 interface, programmed with ModBus RTU transmission protocol. The PMS-90R can be programmed through PC with RS converter and Loggy Soft software.

Front panel views

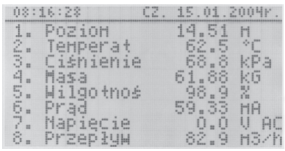

8- chanels view displayed on the same time

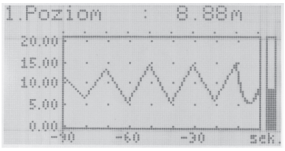

History of process in time

Presentation of results in "Single circuit" mode

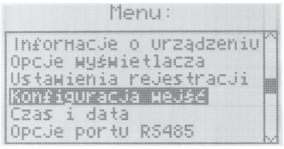

Main menu

Electrical diagram

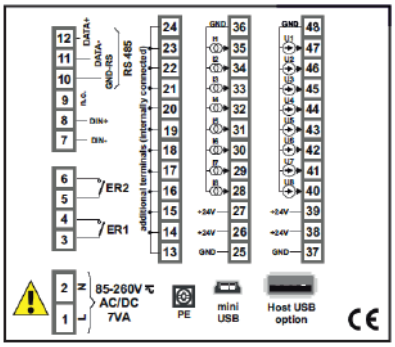

Version with U/I inputs

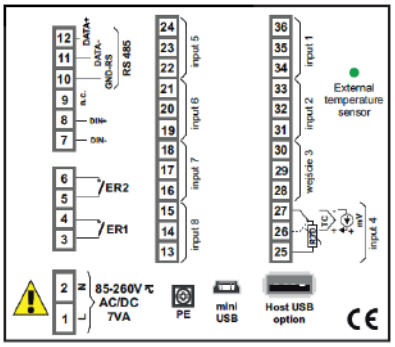

Version with RTD/TC inputs

Technical data

Input signal	U/I (0/4–20mA, 0/1-5V, 0/2-10V or mixed) RTD/TC (Pt100, Pt500, Pt1000, TC type K, S, J, N, R, B, E, 0-60mV, 0-75mV, 0-150mV or mixed)
Power supply	19 – 50V DC, 85 – 260V AC
Power consumption	max. 12 VA
Measuring range	± 9999 (current inputs) -100°C ÷ +600°C (RTD input)
Digital input	1 input 24V DC
Internal power supply	24V DC/200mA
Communication interface	RS-485 (Modbus RTU), USB Host port
Transmission speed	up to 115 200bit/sec.
Memory capacity	8 MB
Display	graphic LCD 128x64
Working temperature	0 ÷ 50 °C
Casing dimensions	96x96x100 [mm]
Relay outputs	24VAC (35VDC)/200mA (ER1, ER2)
IP protection	Front side: IP40 (front USB version) IP65 (rear USB version) Terminals: IP20

Optional accessories

- USB/RS-485 converter
- RS-232/RS-485 converter

Transparent door with moulded frame with key

Ordering procedure

PMS-90R/___/___/___/___

Power supply:
19 - 50V DC, 85 - 260V AC

Type of input:
U/I
RTD/TC

Number of chanels: 1, 4, 8

USB inerface: front, back

Display WW-11ALW

NEW

- ✓ **Backlight display 5 × 10 mm**
- ✓ **Current input 4...20 mA**
- ✓ **Aluminum, wall or pipe mounted casing**
- ✓ **IP66**
- ✓ **Intrinsic safety certificate**

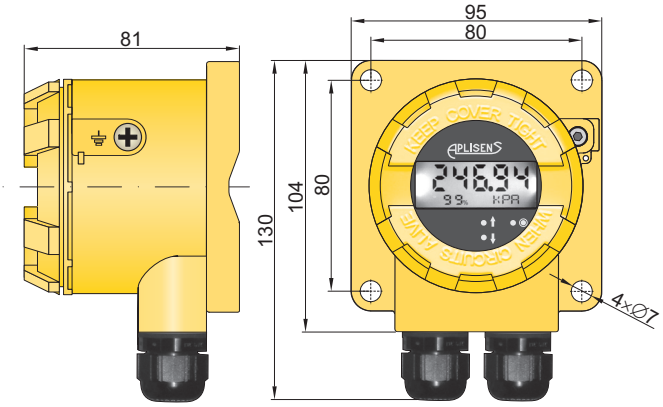

Application and function

The **WW-11ALW** digital indicator is designed to be used with any device with a 4…20 mA. The WW-11ALW has a configurable range of readings from -99999 to 99999. It has a display with 10 mm high figures. The position of the decimal point is also configurable. In addition display shows units of measured value and value of current in current loop or percentage of measuring range. Display can be mounted directly on wall or on ∅35…∅65mm The indicator does not require an external power supply.

Technical data

Input signal	4 ÷ 20 mA
Display range	-99999…99999
Display error	0,2% ± 1 digit
Voltage drop	3 V
Additional voltage drop when backlight is on	3 V
Ambient temperature	-30…80°C
Ingress protection class	IP66 special version – IP67

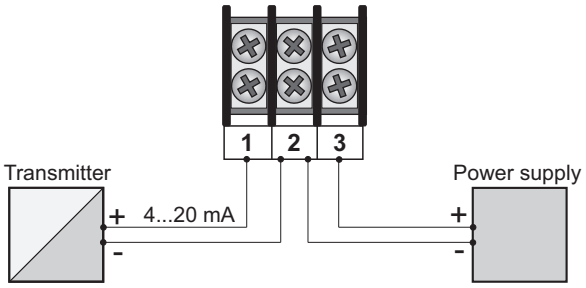

Electrical diagram

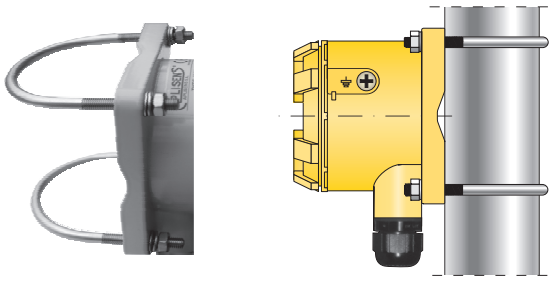

Mounting bracket for for mounting WW-11ALW on vertical or horizontal pipe ∅35...∅65

Ordering code: Mounting bracket **WW-11ALW**

Ordering procedure

WW-11ALW /____

Options: **IP67**, **Ex**, **Ex(Da)**, **PP**

IP67 - ingress protection class IP67

Ex - Intrinsic Safety version

Ex II 2G Ex ia IIC T4 Gb

Ex(Da) - Intrinsic Safety version

Ex II 2G Ex ia IIC T4 Gb
II 1D Ex ia IIIC T110°C Da

PP - version for transmitters with capillary in cable (not available in Ex and Ex(Da) version)

Factory settings: range: **0...100,00**; unit: **%**; current value in measuring loop **4...20 mA**

Displays WW-11N type and WW-45

Display WW-45

Application and function

The WW-45 digital indicator is designed to be used with any device with a 4…20 mA output signal and has a standard DIN EN 175301-803 connector on its output terminal. The indicator is typically used to give an additional local reading when carrying out remote measurement of absolute or relative pressures. The WW-45 has a configurable range of readings from -999 to 9999; the position of the decimal point is also configurable. It has a red LED display with 7.62 mm high figures. The indicator does not require an external power supply. It is fitted with a configurable open collector (OC) two-state output.

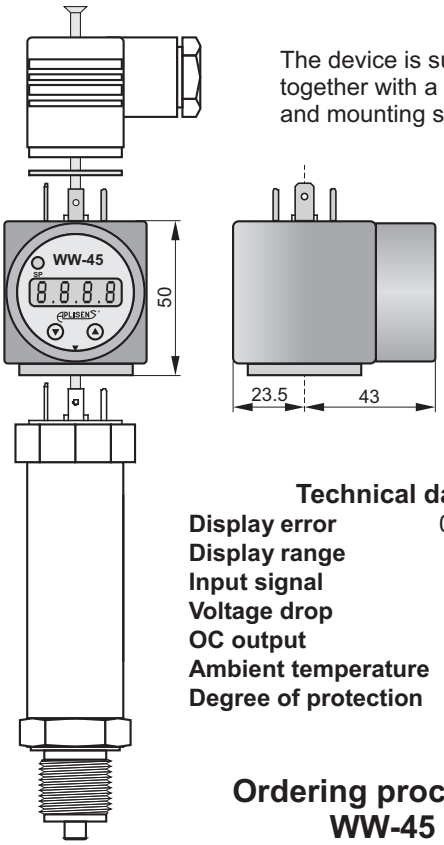

The device is supplied together with a flat seal and mounting screw.

Technical data

Display error	0.2% ± 1 digit
Display range	-999…9999
Input signal	4…20 mA
Voltage drop	max. 6 V
OC output	90 mA
Ambient temperature	0…70°C
Degree of protection	IP65

Ordering procedure WW-45

Display WW-11N

Dimensions

height 115, width 65, depth 55

Application and function

The WW-11N display can be used with any device having the output signal of 4...20 mA. The WW-11N has a configurable display range from –999 to 9999. Either linear or radical characteristic may be selected as well as display filtering level and rounding of the reading number. The measurement result is displayed on four-digit display LED (red), with figuring 13 mm high. The casing with a degree of protection IP-65 makes the display possible to be operated under difficult environmental conditions. No external power source is required.

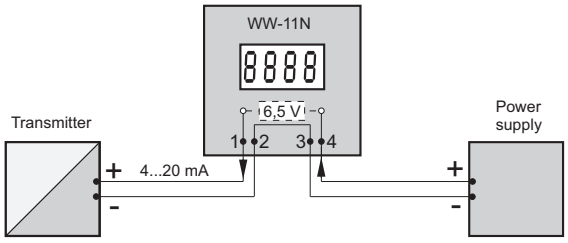

Electrical diagram

Technical data

Display error	0.2%
Display range	-999…9999
Input signal	4…20 mA
Voltage drop	max. 6.5 V
Ambient temperature	-30…50°C
Degree of protection	IP65

Ordering procedure WW-11N

Digital indicator with relay outputs PMS-920

- ✓ **Current input 4…20 mA or 0…20 mA**
- ✓ **Voltage input 0…5V, 1…5V, 0…10V, 2…10V Pt100**
- ✓ **2 or 4 settable relay outputs: 1 A, 250 V AC**
- ✓ **Power supply 85…260 v AC/DC**
- ✓ **Integrated power supply 24 V DC**
- ✓ **RS-485 output**

Functions and use

Programmable indicator PMS-920 is applicable to cooperation with the transmitters having a standard current or voltage output signal. Two alarm values controlling the relay outputs can be programmed. Diodes on the front of the indicator indicate the exceeding of the alarm values. The relay outputs have a pair of operating contacts. The transmitter can be powered directly from the indicator with a built-in auxiliary 24 V DC supply unit.

PMS-920 meters enables the following parameters to be programmed:

- type of input signal: 4…20 mA or 0…20 mA, 0…5 V, 0…10 V, 1…5 V or 2…10 V,
- measured value display range and decimal point position;
- level and hysteresis of action of relays;
- state of contact during alarm;
- password restricting access to the programming menu;
- display filtering level.
- color of display (green or red).

External dimensions

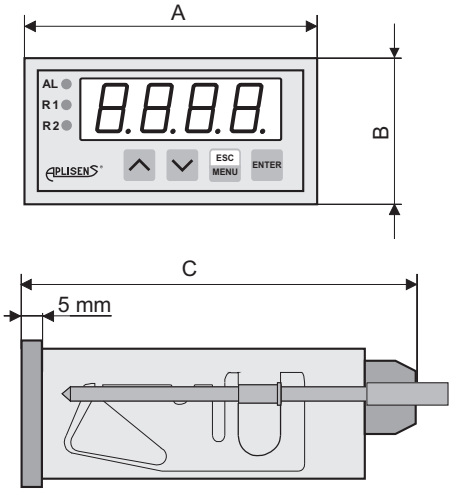

PMS-920
(A=72mm , B=36mm , C=100mm)
Dimensions of panel cut-out 67mm × 32,5mm

Technical data

Input signal	4...20 mA or 0...20 mA, 0...5 V, 0...10 V, 1...5 V or 2...10 V
Display range	-999 to 9999
Display error	0,1% ± 1 digit
Relay outputs	2
special version	4
	1 A, 250 V AC, cosö=1
Power supply	85...260V AC/DC
Integrated power supply:	24 V DC stab., max. 100 mA
Operating temperature	-20…50°C
Storage temperature	-20…70°C
Display size:	LED 4x13mm
special version	LED 4x20mm (PMS-920/20)
Casing	panel type
	IP 40 (from the front) IP 20 (from the terminals)

Ordering procedure

PMS-920

Digital indicator with relay outputs PMT-920

- ✓ **Input Pt100, Pt500, Pt1000 or K, S, J, T, N, R, B, E**
- ✓ **2 settable relay outputs: 1 A, 250 V AC**
- ✓ **Power supply 85…260 v AC/DC**

Functions and use

Programmable indicator PMT-920 is applicable to cooperation with the temperature sensors. Indicator works with resistance sensor Pt (PMT-920/R) or thermocouples type K, S, J, T, N, R, B, E (PMT-920/U). PMT-920/R can be connected with 2-, 3- or 4- wire sensors. Indicator recognize 3- and 4- wire sensors and compensate line resistance automatically. Two alarm values controlling the relay outputs can be programmed. Diodes on the front of the indicator indicate the exceeding of the alarm values. The relay outputs have a pair of operating contacts.

PMT-920 meters enables the following parameters to be programmed:

- level and hysteresis of action of relays;
- state of contact during alarm;
- password restricting access to the programming menu;
- display filtering level.
- color of display (green or red).

External dimensions

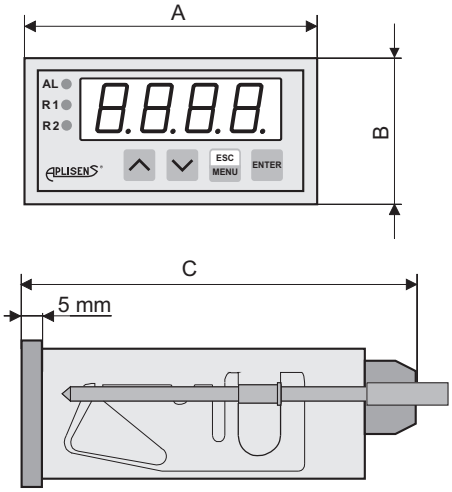

(A=72mm , B=36mm , C=100mm)

Dimensions of panel cut-out 67mm × 32,5mm

Technical data

Input signal	Pt100, Pt500, Pt1000 – PMT-920/R K, S, J, T, N, R, B, E – PMT-920/U
Display range	-999 to 9999
Indication range	Pt: -100…600°C K: -200…1370°C S: -50…1768°C J: -210…1200°C T: -200…400°C N: -200…1300°C R: -50…1768°C B: 250…1820°C E: -200…1000°C
Display error	0,25% ± 1 digit
Resolution	0,1°C for PMT-920/R 1°C for PMT-920/UR
Relay outputs	2 1 A, 250 V AC, cosö=1
Power supply	85...260V AC/DC
Integrated power supply:	24 V DC stab., max. 100 mA
Operating temperature	0…50°C (special version -20…50°C)
Storage temperature	-10…70°C (special version -20…70°C)
Display size:	LED 4x13mm
Casing	panel type IP 40 (from the front) IP 20 (from the terminals)

Ordering procedure

PMT-920 /___/___

Input:
R - (Pt100, Pt500, Pt1000)
U - (K, S, J, T, N, R, B, E)

Special version:
-20°C - operating and storage temperature starts from -20°C

Digital indicator with relay outputs PMS-970P

- ✓ **Universal measuring input 4...20 mA, 0...20 mA or 0...10 V**
- ✓ **4 relay outputs: 1 A, 250 V AC**
- ✓ **4 × 20 mm red LED display**
- ✓ **RS-485 digital output**
- ✓ **Integrated power supply 24 V DC**
- ✓ **Additional options:**
  - ⇨ **passive current output**

Functions and use

The programmable PMS-970P indicator is applicable to cooperation with the transmitters having a standard current or voltage output signal. Four alarm values controlling the relay outputs can be programmed. Diodes on the front of the indicator indicate the exceeding of the alarm values. The device can use a linear characteristic or a multi-segment characteristic freely definable by the user. The meter has RS-485/MODBUS RTU digital output and can also be provided with a passive current output with programmable range of current variation.

The PMS-970P enables the following parameters to be programmed:

- ♦ measuring value display range and decimal point position;
- ♦ level and hysteresis of action of relays;
- ♦ relay operation mode: normally connected or normally disconnected;
- ♦ input signal conversion characteristic (segmental approximation, max. 15 segments);
- ♦ display filtering level;
- ♦ "alternating control of outputs" function used to balance wear on groups of pumps.

Outer dimensions:
width **96,** height **48,** depth **100 [mm]**
Dimensions of panel cut-out:
90.5 × 43 [mm]

Technical data

Input signal	0/4...20 mA or 0...10 V
Display range	-999 to 9999
Display error	±0.1%
Relay outputs	4 × 1 A/250 V AC, NO
special version:	2 × 1 A/250 V AC, NO/NC
Power supply	230 V AC
special version:	24V AC/DC
Integrated power supply	24 V DC stab., max. 25 mA
Operating temperature range	-20…50°C
Storage temperature	-20…70°C
Casing	panel type, IP65 (from the front)

Wiring diagram

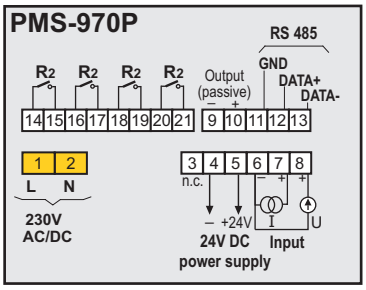

Ordering procedure

PMS-970P /___

Special version:
2 – version with 2 relay outputs
WY – passive current output
24 - power supply 24 V AC/DC

Digital indicator with relay outputs PMS-620N

M12x1,5 cable gland

- ✓ **4 × 20 mm red LED display**
- ✓ **Current input 4…20mA or 0…20mA**
- ✓ **Voltage input 0…5V, 1…5V, 0…10V, 2…10V**
- ✓ **Two relay outputs: 1 A, 250 V AC**
- ✓ **RS-485 digital output**
- ✓ **Integrated power supply 24 V DC**
- ✓ **Wall mounted casing, IP65**

Application and function

The programmable PMS-620N indicator is applicable to cooperation with the transmitters having a standard input current and voltage signals . Two alarm values controlling the relay outputs can be programmed. Diodes on the front of the indicator indicate the exceeding of the alarm values. The relay outputs have a pair of operating contacts. The transmitter can be powered directly from the indicator with a built-in auxiliary 24 V DC supply unit.

The casing with a degree of protection IP-65 makes the display possible to be operated under difficult environmental conditions.

The following parameters can be programmed with the PMS-620N indicator:

- type of input signal
- measured value display range and decimal point position;
- level and hysteresis of action of relays;
- status of contact during alarm;
- password restricting access to programming menu;

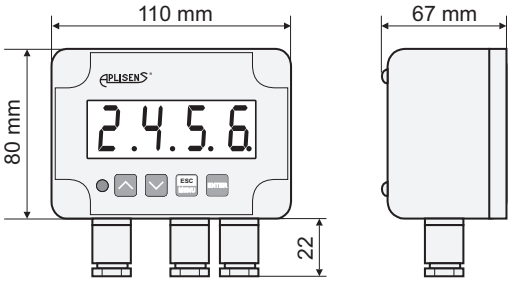

Wiring diagram

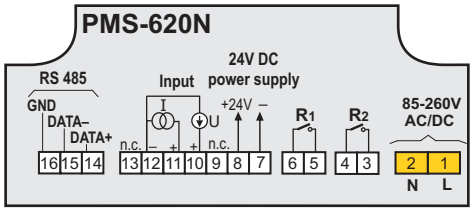

Technical data

Input signal	4...20 mA, 0...20 mA 0..5V, 0..10V, 1..5V, 2..10V
Display range	-999 to 9999
Display error	0,1% ± 1 digit
Relay outputs	2 (NO) 1 A, 250 V AC, cos φ = 1
Power supply	230 V AC ± 10%, max. 4,5 VA
Integrated power supply	24 V DC stab., max. 100 mA
Operating temperature	-20…50°C
Storage temperature	-20…70°C
Casing	wall mounted, IP 65

Ordering procedure

PMS-620N

Chapter VII

Power supplies, isolators, signal converters, overvoltage protection

Current signal isolator
without auxiliary power SP-02 ..... VII/ 2

Power supply / isolator / signal converters
ZSP-41/1 and ZSP-41/2 ..... VII/ 3

Isolator / signal converter SP-11 ..... VII/ 4

Intrinsically safe power supply and isolator
ZS-30Ex ..... VII/ 5

Intrinsically safe power supply and isolator
ZS-31Ex ..... VII/ 7

Overvoltage protection circuit UZ-2 ..... VII/ 9

SP-02 current signal isolator without auxiliary power

- ✓ **Single circuit or dual circuit version in 12,5 mm wide casing**
- ✓ **Accuracy 0,16%**
- ✓ **Casing can be fitted on a standard rail (TS35, TS32)**

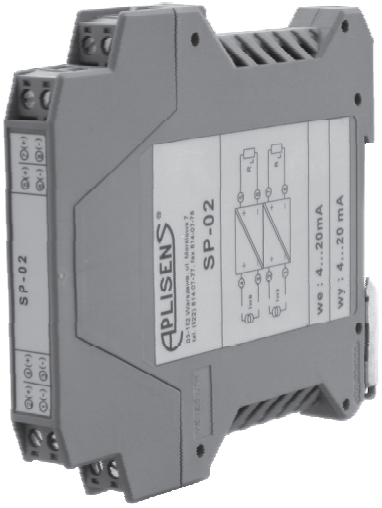

Applications and functions

The SP-02 signal isolator provides galvanic separation of an input signal (0/4...20 mA) and converts it, through a separation system into an output signal (0/4...20 mA), with a two-wire power supply in the input signal loop.

The device is typically used to provide galvanic separation between the measurement circuits installed on an object, and the main section. This enables the effect of object-related interference in the monitoring, control and recording systems of automatic devices to be largely eliminated.

Technical parameters

Input data	
Input signal	0/4...20 mA
Voltage drop at input	≤ 3,5 V + I_{OUT} × R_O
Output data	
Output signal	0/4...20 mA
Load resistance R_O	0...500 Ω
Galvanic separation	transformer-based
Strength test parameters	1,5 kV, 50 Hz, 1 min
Dynamic characteristics	
Transmission band	5 Hz (3 dB)
Conversion errors	
Accuracy	≤ ±0,16%
When converting a 0...20 mA signal to 0...20 mA in the range below 1% of signal, the error increases to ±0,5%.	
Effect of temperature fluctuations	0,1% / 10°C
Effect of load resistance fluctuations	0,1% / 100 Ω
Conditions of normal use	
Ambient temperature	5...60°C
Relative humidity	30...80%
Casing	
Type	ME 12.5 (PHOENIX)
Ingress protection rating	IP20
Weight	0,1 kg

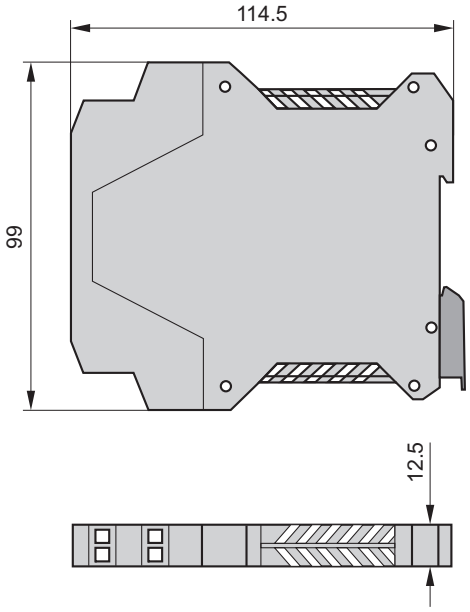

Ordering procedure

Standard version: **SP-02 /___**

Special version: **SP-02 / 0...10 V /___**
(with 0...10 V voltage output)

Number of circuits (1 or 2)

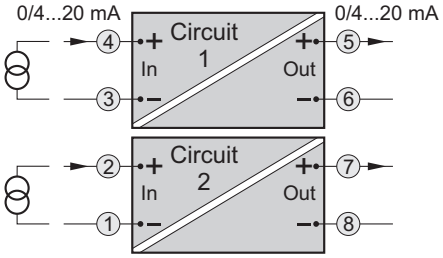

Electrical diagram

Power supply/isolator/signal converter ZSP-41/1 and ZSP-41/2

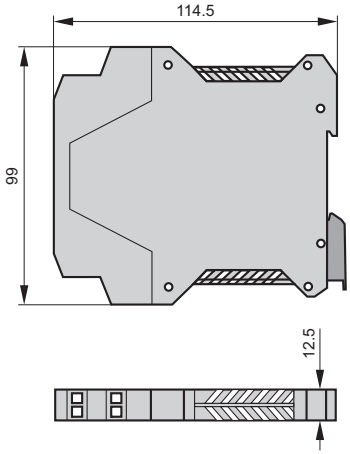

- ✓ **Full galvanic separation of circuits (IN-OUT, IN-SUP, OUT-SUP)**
- ✓ **Ability to select input and output signals**
- ✓ **Ability to use input line to power a two-wire transmitter**
- ✓ **Casing can be fitted on a standard rail (TS35)**

Applications and functions

The ZSP-41 provides galvanic separation of an input signal (4 ÷ 20 mA, 0 ÷ 20 mA, 0 ÷ 10 V) and converts it, through a separation system into an output signal. An additional input line may be connected to any two-wire transmitter to provide it with a 19 ÷ 24 V. The device is typically used to provide galvanic separation between the measurement circuits installed on an object, and the main section.

Configuration, calibration

The user can use switches to configure input and output settings for the following signals. Access to switches by removing the front panel. Isolator can be produced to support other input and output signals. Calibration is carried out using potentiometers.

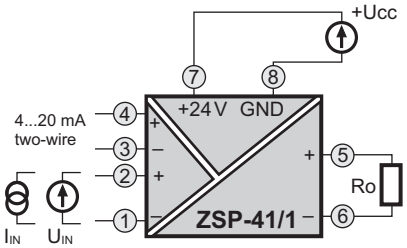

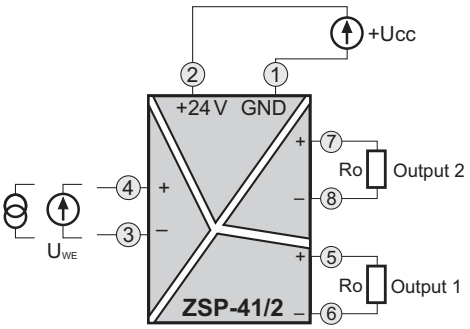

Technical parameters

- **Input parameters**
  Input signal (selected by switch)
  0...20 mA, 4...20 mA, 0...10 V
  Input resistance
  ≥ 50 kΩ (voltage input) / ≤ 50 Ω (current input)
- **Output parameters**
  Output signal (selected by switch)
  0...20 mA, 4...20 mA, 0...10 V
  Load resistance
  0...500 Ω (current output) / ≥ 1 kΩ (voltage output)
- **Galvanic separation**: opto-electronic
  Strength test parameters
  1,5 kV AC, 50 Hz, 1 min
- **Dynamic characteristics**
  Transmission band: 5 Hz (3 dB)
- **Power supply**
  Supply voltage: 24 V ± 20%
  Supply current: ≤ 100 mA
- **Conditions of normal use**
  Ambient temperature: 5...60°C
  Relative humidity: 30...80%
- **Casing**
  Type: UEGM 22.5 (PHOENIX)
  Ingress protection rating: IP20
- **Weight**: 0,1 kg
- **Conversion errors**
  Accuracy: ≤ ±0,16%
  Typically, the converter is set for the range 4...20 mA / 4...20 mA. Setting of a different range will lower the class of the converter to 0,25% (tuning is possible using trimmers accessible from the front plate).

Ordering procedure

Standard version: **ZSP-41/1**

Special version: **ZSP-41/1 /___/___**

Input signal

Output signal

Standard version: **ZSP-41/2**

Special version: **ZSP-41/2 /___/___**

Input signal

Output signal

Isolator/signal converter SP-11

- ✓ **Single circuit or dual circuit version in 12,5 mm wide casing**
- ✓ **Opto-electronic galvanic separation (IN-OUT)**
- ✓ **Ability to select input signal**
- ✓ **9...36 V power supply in the output signal loop**
- ✓ **Casing can be fitted on a standard rail (TS35)**

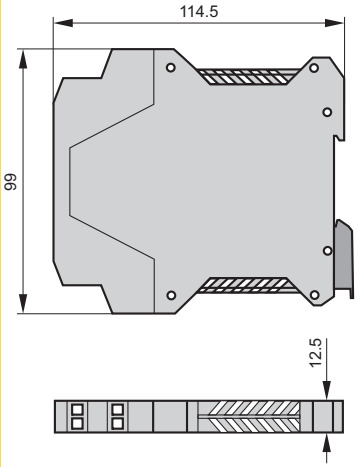

Applications and functions

The SP-11 signal isolator provides galvanic isolation of an input current or voltage signal and converts it, through a separation system into an output signal 4...20 mA with a two-wire power supply in the output signal loop.

The device is typically used to provide galvanic isolation between the measurement circuits installed on an object, and the main section.

Configuration, calibration

The user can use switches to configure input and output settings for the following signals

Technical parameters

- **Input parameters**
  Input signal (selected by switch)
  0...20 mA, 4...20 mA, 0…5mA, 1…5mA,
  0...10 V, 2…10V
  Input resistance
  ≥ 50 kΩ (voltage input) / 20 Ω (current input)
- **Output parameters**
  Output signal: 4...20 mA
  Load resistance: 0...500 Ω
- **Galvanic separation**: opto-electronic
  Strength test parameters
  1,5 kV AC, 50 Hz, 1 min
- **Dynamic characteristics**
  Transmission band: 5 Hz (3 dB)
- **Power supply**
  Supply voltage: 9...36 V
- **Conditions of normal use**
  Ambient temperature: 5...60°C
  Relative humidity: 30...80%
- **Casing**
  Type: UEGM 22.5 (PHOENIX)
  Ingress protection rating: IP20
- **Weight**: 0,1 kg
- **Conversion errors**
  Accuracy: ≤ ±0,16%
  Typically, the converter is set for the range 4...20 mA / 4...20 mA. Setting of a different range will lower the class of the converter to 0,25% (tuning is possible using trimmers accessible from the front plate).

Electrical diagram

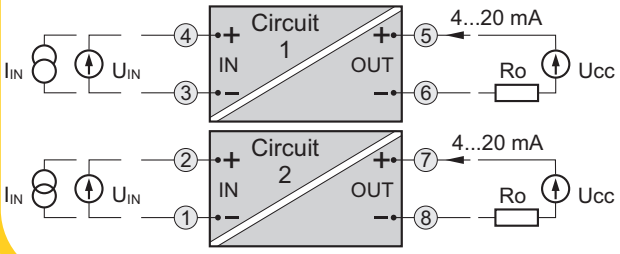

Ordering procedure

Standard version: **SP-11 /___**

Special version: **SP-11 /__÷__/___**

Input signal

Number of circuits (1 or 2)

Intrinsically safe power supply and isolator ZS-30Ex1

- ✓ I (M1) [Ex ia Ma] I
  II (1)G [Ex ia Ga] IIC
  Ex-rated intrinsically safe
- ✓ **Full galvanic separation of circuits (IN-OUT, IN-SUPPLY, OUT-SUPPLY)**
- ✓ **Accuracy 0,1%**
- ✓ **Casing can be mounted on a standard TS35 rail**

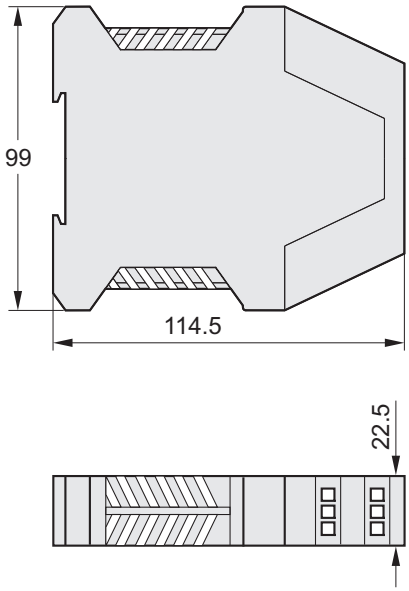

Application and functions

The ZS-30Ex1 power supply and isolator is a partially intrinsically safe device with an external (input) intrinsically safe circuit.

The ZS-30Ex1 is designed to supply power to intrinsically safe transmitters used in a hazardous area, with a 4...20 mA signal in a two-wire transmission, and to transform that signal through a galvanic separation circuit into one of the standard signals used in automatic control.

The supply voltage of the intrinsically safe input circuit of the standard version of the ZS-30Ex1 is 25 V DC. At the customer's request this voltage can be altered to 16, 18, 22 or 24 V DC.

The output circuit can be connected to any apparatus with a separated supply voltage of < 250 V (from transformer-based network supplies).

Calibration

The user can adjust the setting of the start-point and width of the range using potentiometers accessible via marked holes in the front panel.

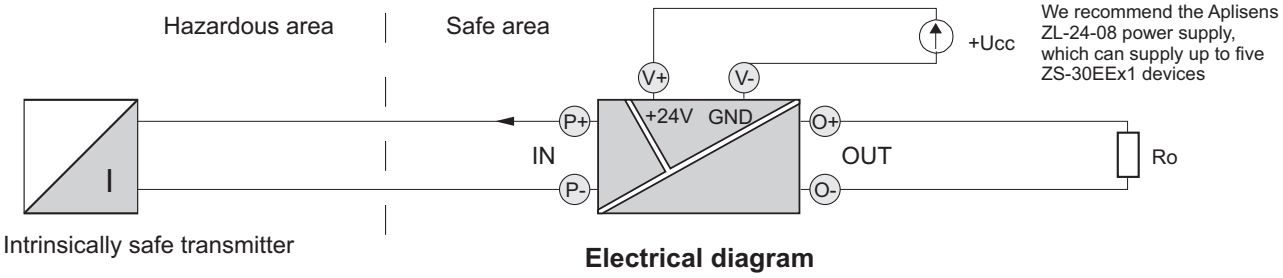

Electrical diagram

Technical parameters

- **Input parameters**

Input signal from the transmitter 4...20 mA

Standard version

Supply voltage of the input circuit U_{IN}	15 V	18 V	20 V	22 V	**25 V**
Maximum voltage on the terminals of the input circuit U_0	15,75 V	18,9 V	21 V	23,1 V	**25,5 V**

Input voltage after loading by the transmitter with output signal 4…20 mA $U_{IN20} = U_{IN}$ [V] · 0,75
U_{IN} is the supply voltage of the input circuit

Maximum shorting current of input circuit I_0 = 100 mA

- **Output parameters**

Output signal	Output load resistance
4...20 mA	**500 Ω**
0...20 mA	500 Ω
0...5 mA	2 kΩ
0...5 V, 1...5 V, 0...10 V	10 kΩ

Standard version

- **Galvanic separation**

IN-OUT optoelectronic
IN-SUPPLY, OUT-SUPPLY pulse transformer
Test voltage between circuits 2,5 kV AC, 50 Hz or equivalent DC

- **Conversion errors**

Accuracy 0,1%
Non-linearity ±0,05%
Effect of temperature fluctuations ≤ ±0,1% / 10°C
Effect of load resistance fluctuations ≤ ±0,05%
Effect of supply voltage fluctuations ≤ ±0,1%

- **Dynamic characteristics**

Time constant c. 0,05 s (by arrangement: 0,1...1 s)

- **Power supply**

Supply voltage 24V DC ± 10%
Permitted ripple ≤ 1%
Supply current ≤ 90 mA

- **Conditions of normal use**

Ambient temperature 5...60°C
Relative humidity 30...80%

- **Casing**

Ingress protection rating IP20

- **Weight** 0,2 kg

Ordering procedure

Standard version (U_{IN} = 25 V, output 4...20 mA): **ZS-30Ex1**

Special version: **ZS-30Ex1 /___/___**

Input circuit voltage

Output signal

Important: For transmitters in version ALW with switched on illumination of display and used internal resistor 250Ω should be specifed model ZS-30Ex1/24V/25.2V.

Intrinsically safe network power supply and isolator ZS-31Ex1

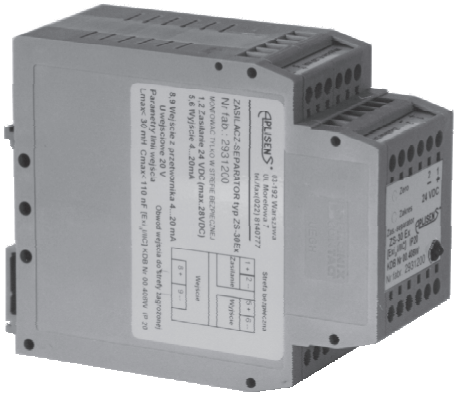

- ✓ I (M1) [Ex ia Ma] I
  II (1)G [Ex ia Ga] IIC
  Ex-rated intrinsically safe
- ✓ **Full galvanic separation of circuits (IN-OUT, IN-SUPPLY, OUT-SUPPLY)**
- ✓ **Accuracy 0,1%**
- ✓ **Casing can be mounted on a standard rail (TS35, TS32)**

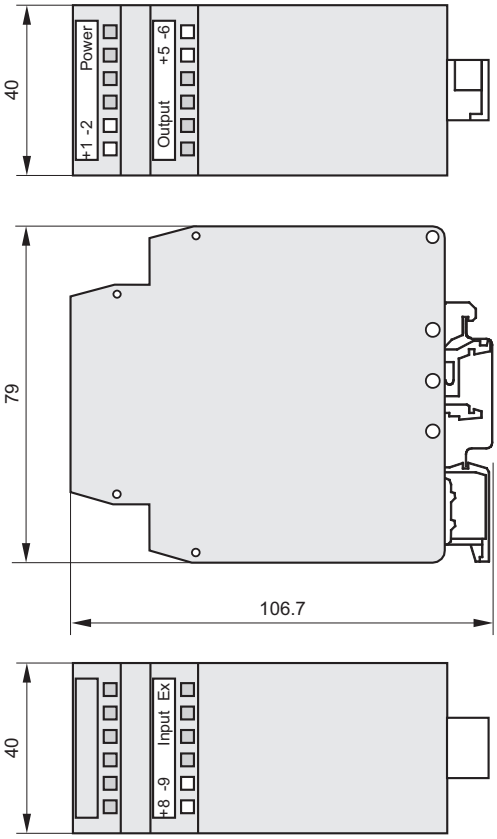

Application and functions

The ZS-31Ex1 power supply and isolator is a partially intrinsically safe device with an external (input) intrinsically safe circuit.

The ZS-31Ex1 is designed to supply power intrinsically safe transmitters used in a hazardous area, with a 4...20 mA signal in a two-wire transmission, and to transform that signal through a galvanic separation circuit into one of the standard signals used in automatic control.

The supply voltage of the intrinsically safe input circuit of the standard version of the ZS-31Ex1 is 25 V DC. At the customer's request this voltage can be altered to 16 or 18 V DC.

The output circuit can be connected to any apparatus with a separated supply voltage of < 250 V (from transformer-based network supplies).

Calibration

The user can adjust the setting of the start-point and width of the range using potentiometers accessible via marked holes in the front panel.

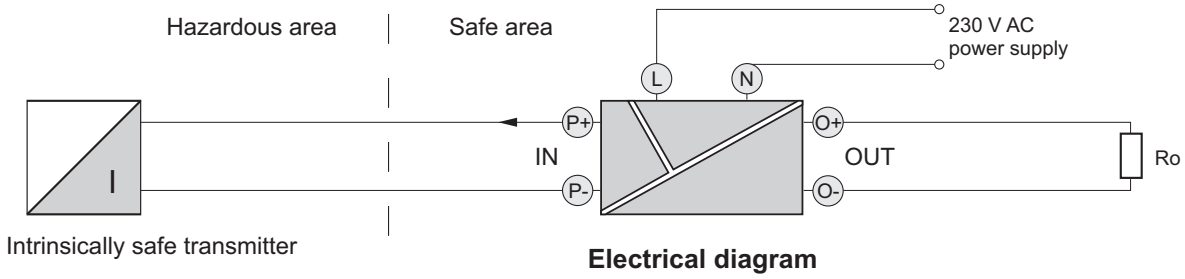

Electrical diagram

Technical parameters

- **Input parameters**

Input signal from the transmitter 4...20 mA

Standard version

Supply voltage of the input circuit U_{IN}	15 V	18 V	20 V	22 V	**25 V**
Maximum voltage on the terminals of the input circuit U_0	15,75 V	18,9 V	21 V	23,1 V	**25,5 V**

Input voltage after loading by the transmitter with output signal 4…20 mA $U_{IN20} = U_{IN}$ [V] · 0,75
U_{IN} is the supply voltage of the input circuit

Maximum shorting current of input circuit I_0 = 100 mA

- **Output parameters**

Output signal	Output load resistance
4...20 mA	**500 Ω**
0...20 mA	500 Ω
0...5 mA	2 kΩ
0...5 V, 1...5 V, 0...10 V	10 kΩ

Standard version

- **Galvanic separation**

IN-OUT optoelectronic
IN-SUPPLY, OUT-SUPPLY network transformers
Test voltage between circuits 2,5 kV AC, 50 Hz or equivalent DC

- **Conversion errors**

Accuracy 0,1%
Non-linearity ±0.05%
Effect of temperature fluctuations ≤ ±0,1% / 10°C
Effect of load resistance fluctuations ≤ ±0,05%
Effect of supply voltage fluctuations ≤ ±0,1%

- **Dynamic characteristics**

Time constant c. 0,05 s (by arrangement: 0,1...1 s)

- **Power supply**

Supply voltage rated: 230 V AC ±10%
Maximum power ≤ 4 VA

- **Conditions of normal use**

Ambient temperature 5...60°C
Relative humidity 30...80%

- **Casing**

Ingress protection rating IP20

- **Weight** 0,35 kg

Ordering procedure

Standard version (U_{IN} = 25 V, output 4...20 mA): **ZS-31Ex1**

Special version: **ZS-31Ex1 /___/___**

Input circuit voltage

Output signal

Important: For transmitters in version ALW with switched on illumination of display and used internal resistor 250Ω should be specifed model ZS-31Ex/24V/25.2V.

Overvoltage protection circuit UZ-2

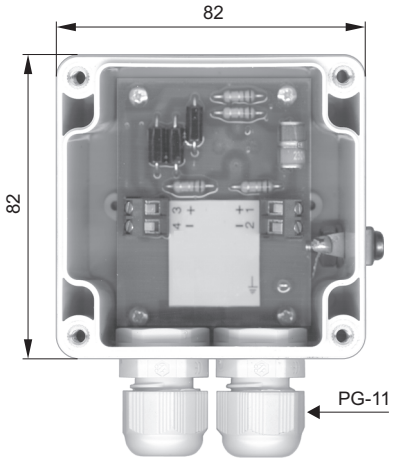

Wall-mounted version

Rail mounted version

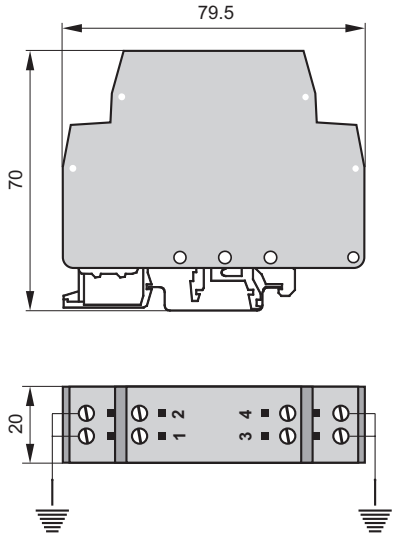

Application

The UZ-2 protection circuit is designed to provide overvoltage protection for measurement transmitters and auxiliary devices. The most common types of overvoltage which cause danger to measuring apparatus are:

- voltage and current pulses in the signal line, caused for example by a break in the induction circuit, the effect of high frequency circuits or high-power energy supply devices;
- overvoltages caused by atmospheric discharge.

Note that the UZ-2 may not be used as a basic lightning protector, but only as additional protection for a measuring device.

The UZ-2 is a type of barrier consisting of diode transiles, resistors and gas arresters.

The barrier provides protection by limiting the size of the voltage which can be applied to the protected device to the voltage of the diode transiles, i.e. approximately 43 V in the case of static overload. Both leads of the signal line are protected independently of each other.

Installation

The device is produced in two versions: a wall-mounted version (N) and rail mounted version (L). It is best to install the device close to the protected apparatus. Electrical connections should be made as shown in the diagram, taking care to ensure proper earthing.

Operating parameters

Maximum working current	150 mA
Maximum working voltage	36,5 V DC
IP 65	

Ordering procedure

Wall-mounted version	**UZ-2/N**
Rail mounted version	**UZ-2/L**

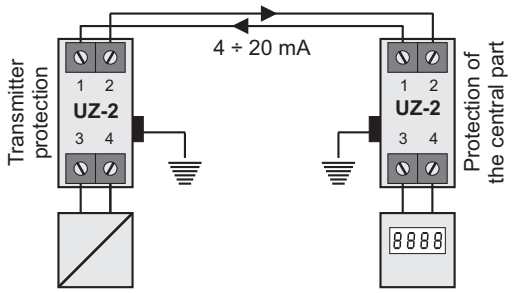

Electrical diagram

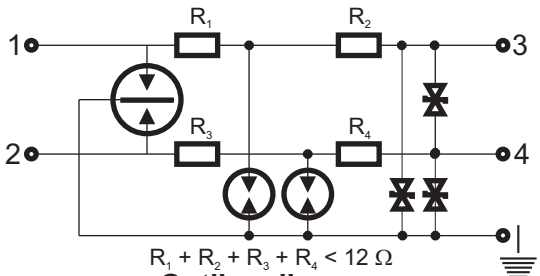

$R_1 + R_2 + R_3 + R_4 < 12\ \Omega$

Outline diagram

Chapter VIII
Flow measuring systems

Electromagnetic flowmeter PEM-1000 ..... VIII/ 2

Electromagnetic flowmeter PEM-500 ..... VIII/ 6

Flange type of nozzle flowmeter ZPK..... VIII/ 10

Welded type of nozzle flowmeter ZPR ..... VIII/ 11

Orifice flowmeter with assembling element ZPS ..... VIII/ 12

Venturi type flowmeter ZPV..... VIII/ 13

Pitot tube flow measurement..... VIII/ 14

Electromagnetic flowmeter type PEM-1000

- **Nominal size: DN10...1000 / ANSI 0,5...40“**
- **Maximum static pressure 1,6MPa**
- **Accuracy: 0,5% or 0,2%**
- **Analog outputs: 4...20mA,**
- **Communication interface: Modbus RTU / RS 485**
- **Pulse output (uni- or bidirectional) or frequency output**

Application

Electromagnetic flowmeter for bidirectional measurement of liquids with a minimum conductivity of ≥ 5 µS/cm:

- Acid, alkalis
- Paints
- Pastes
- Water, wastewater, etc.

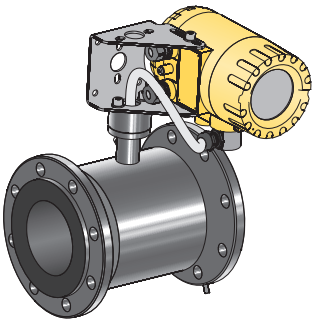

PEM-1000ALW

Measuring principle:

Following Faraday's law of magnetic induction, a voltage is induced in a conductor moving through a magnetic field. In the electromagnetic measuring principle, the flowing medium is the moving conductor. The voltage induced is proportional to the flow velocity and is supplied to the amplifier by means of two measuring electrodes. The flow volume is calculated by means of the pipe cross-sectional area.The DC magnetic field is created through a switched direct current of alternating polarity.

Measuring system

The measuring system consists of a transmitter and a sensor.
Two versions are available:

- Compact version: Transmitter and sensor form a mechanical unit PEM-1000ALW
- Remote version: Sensor is mounted separate from the transmitter PEM-1000NW

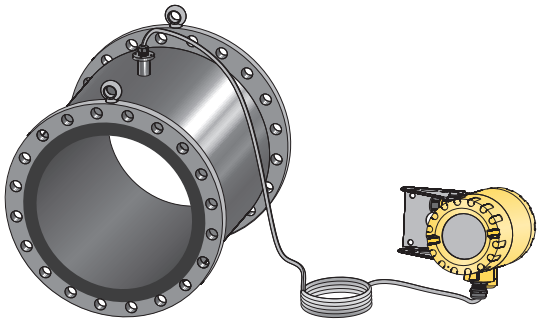

PEM-1000NW

Advantages

- Flexible and clever assembling system
- Easy and fast-moving change from compact to remote version
- Innovative and high-power transmitter for every application
- Robust and resistant cover of sensor and transmitter

Flow value table [m³/h]

DN acc. DIN	Recommended flow values		Factory settings				
			Current output 4...20mA		Pulse output		Cut-off level for small flows (v~0,1 [m/s])
	~$Q_{(min)}$	~$Q_{(max)}$	Measuring range	Flow speed (for URV)	Volume / pulse	Number of pulses / m³	
	[m³/h]	[m³/h]	[m³/h]	[m/s]	[m³/pulse]		[m³/h]
10	0,08	2,8	0÷1	3,54	0,0000025	400000	0,03
15	0,19	6,4	0÷2	3,14	0,000005	200000	0,06
20	0,34	11	0÷4	3,54	0,00001	100000	0,12
25	0,5	18	0÷5	2,83	0,0000125	80000	0,15
32	0,9	29	0÷10	3,45	0,000025	40000	0,3
40	1,4	45	0÷15	3,32	0,00004	25000	0,45
50	2,1	71	0÷20	2,83	0,00005	20000	0,6
65	3,6	119	0÷30	2,51	0,0001	10000	0,9
80	5	181	0÷50	2,76	0,000125	8000	1,5
100	8	283	0÷100	3,54	0,00025	4000	3
125	13	442	0÷150	3,40	0,0004	2500	4,5
150	19	636	0÷200	3,14	0,0005	2000	6
200	34	1131	0÷360	3,18	0,001	1000	10,8
250	53	1767	0÷500	2,83	0,00125	800	15
300	76	2545	0÷760	2,99	0,002	500	22,8
350	104	3464	0÷1000	2,89	0,0025	400	30
400	136	4524	0÷1300	2,87	0,004	250	39
500	212	7069	0÷2000	2,83	0,005	200	60
600	305	10179	0÷3000	2,95	0,008	125	90
800	416	13854	0÷5000	2,76	0,0125	80	120
1000	848	28274	0÷8000	2,83	0,025	40	240

Technical data

Specification for PEM-1000 control unit

Electrical conductivity of the medium	≥ 5μS/cm
Input resistance	≥ $10^{10}\Omega$
Accuracy	±0,5% of reading at 20÷100% $Q_{10m/s}$ special version: ±0,2% of reading at 20÷100% $Q_{10m/s}$ (for reference conditions)*
Low flow rejection	adjustable, any value
Actual flow	both directions (l/s,m^3/h, m^3/s, other)
Totalizer	3 counters: total, positive, negative (m^3, other)
Configuration	LCD display/buttons or Modbus RTU via RS485
Empty pipe detection	cyclic, configurable
Analog output	4÷20mA/500Ω active output (passive output – on request)
Pulse/frequency output	max. 24V/10mA DC 0,1…2000Hz in frequency mode up to 500Hz in pulse mode
2-state output OC	2, open collector, max. 35V DC for each galvanic insulation, reverse polarity protection
Communication output	Modbus RTU/RS 485 galvanic insulation
2-state input	5…35V DC/2mA passive input, galvanic insulation, reverse polarity protection
Power supply	90..260V AC/50Hz/15VA 10…36V DC/15W (reverse polarity protection)
Protection class	IP66 (IP67 on request)
Ambient temperature	-20…60°C
Weight	3,5kg

* Reference conditions according to PN-EN 29104:2003

Specification for PEM-1000 sensor

Nominal size	DN10÷1000 / ANSI 0,5”…40”
Max. static pressure	standard: 1,6MPa (2,5MPa, 4MPa on request)
Process connection	flange DIN, ANSI
Ambient temperature	-20÷60°C
Liner temperature range	Rubber: -5÷90°C Neoprene: 0÷80°C Teflon PTFE: -25÷90°C PFA: -10÷90°C
Connection cable	standard: 8m (other on request)
Electrodes material	316L (Hastelloy/Tantalum)
Liner	Hard rubber DN40÷1000 Neoprene DN40÷1000 Teflon PTFE DN15÷500 PFA DN10
Casing and flange material	standard : carbon steel
Rustproofing	paint
Excitation coils supply	from the transmitter
Excitation of coils isolation class	E
Protection class	standard: IP67, (IP68 on request)
Measuring principle	electromagnetic
Accessories	grounding rings

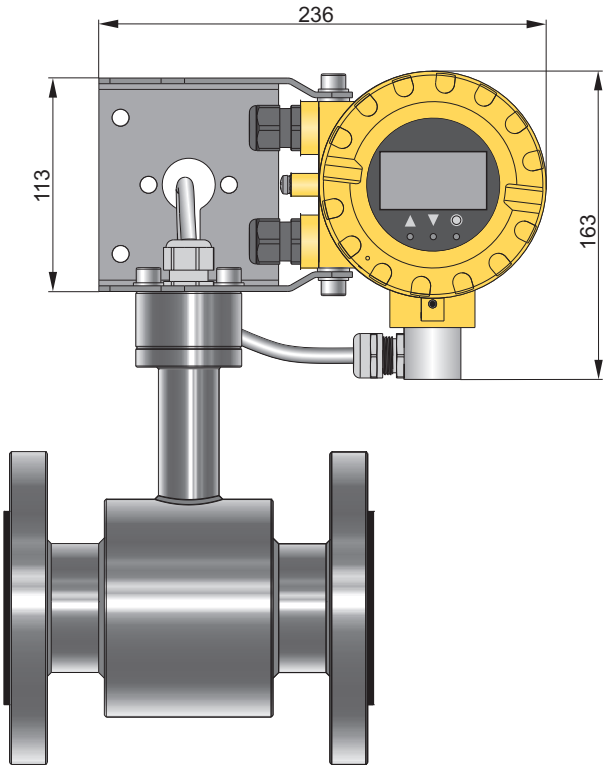

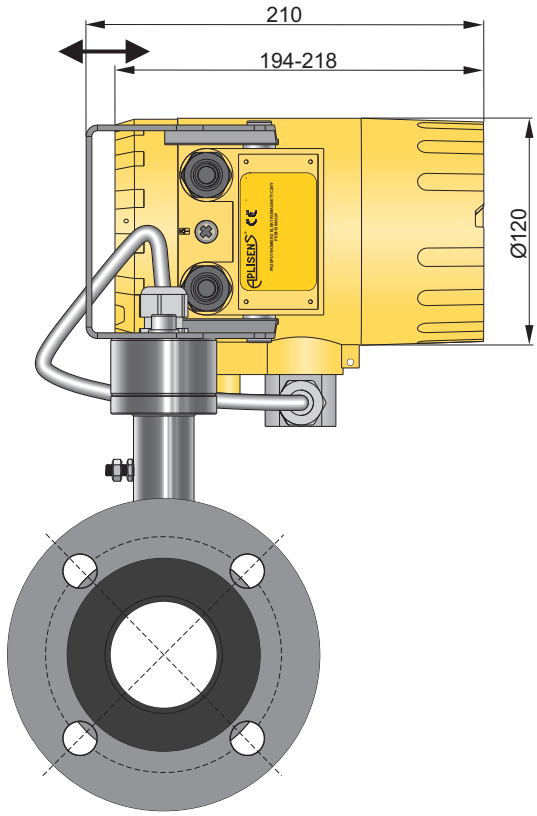

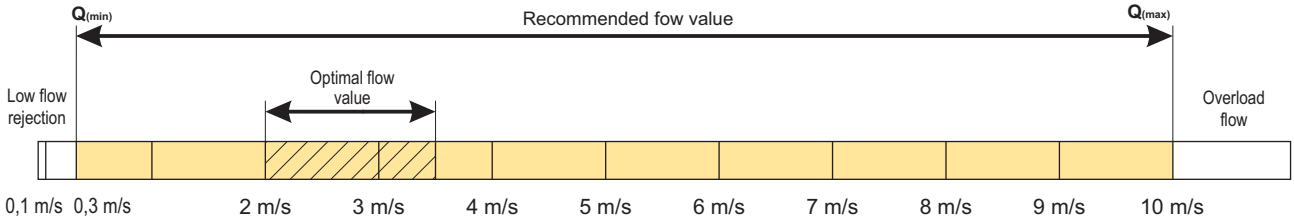

Dimensions of sensor

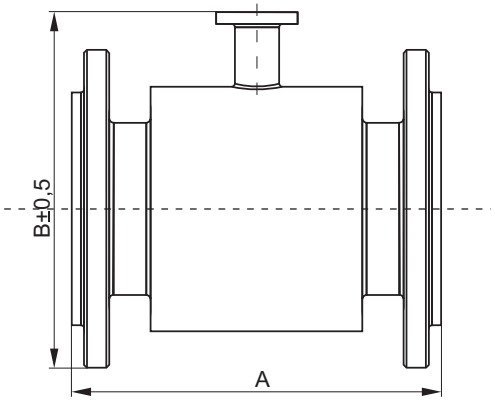

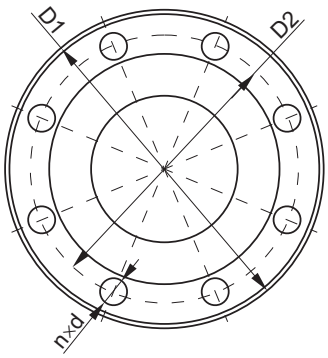

DN 10 – DN 150 A ± 5 mm

DN 200 – DN 1000 A ± 10 mm

		Dimensions [mm]						Weight
DN	PN	A	B	D1	D2	d	n	kg
10	16	200	153	90	60	14	4	5
15			155	95	65	14	4	5
20			160	105	75	14	4	6
25			167	115	85	14	4	7
32			180	140	100	18	4	8
40			185	150	110	18	4	8
50			191	165	125	18	4	9
65			209	185	145	18	4	11
80			224	200	160	18	8	13
100		250	245	220	180	18	8	16
125			276	250	210	18	8	21
150		300	305	285	240	22	8	26
200		350	375	340	295	22	12	36
250		400	430	405	355	26	12	60
300		500	487	460	410	26	12	80
350			542	520	470	26	16	90
400		600	615	580	525	30	16	120
450			657	640	585	30	20	130
500			750	715	650	33	20	150
600			870	840	770	36	20	240
700		700	927	910	840	36	24	340
800		800	1050	1025	950	39	24	400
900		900	1145	1125	1050	39	28	480
1000		1000	1285	1255	1170	42	28	600

		Dimensions [mm]						Weight
ANSI	lbs	A	B	D1	D2	d	n	kg
1/2”	150	200	155	88,9	60,45	15,7	4	5
3/4"			160	98,6	69,85	15,7	4	6
1”			167	108	79,25	15,7	4	7
1 1/4"			180	117,3	88,9	15,7	4	8
1 1/2"			185	127	98,6	15,7	4	8
2”			191	152,4	120,7	19,1	4	9
2 1/2"			209	177,8	139,7	19,1	4	11
3”			224	190,5	152,4	19,1	4	13
4”		250	245	228,6	190,5	19,1	8	16
5”			276	254	215,9	22,4	8	21
6”		300	305	279,4	241,3	22,4	8	26
8”		350	375	342,9	298,5	22,4	8	36
10”		450	430	406,4	362	25,4	12	60
12”		500	487	482,6	431,8	25,4	12	80
14”		550	542	533,4	476,3	28,4	12	90
16”		600	615	596,9	539,8	28,4	16	120
18”			657	635	577,9	31,75	16	130
20”			750	698,5	635	31,75	20	150
24”			870	812,8	749,3	35,1	20	240

Electrical diagrams

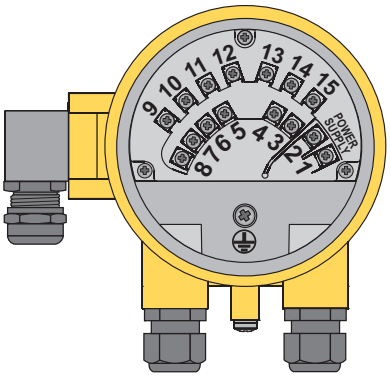

	Terminal	Description		
Power supply	1	90...260V AC	(-)	10...36V DC (on request)
	2		(+)	
2-state output 1	3	reverse polarity protection, galvanic insulation, passive		
	4			
Pulse/frequency output	5	reverse polarity protection, galvanic insulation, passive		
	6			
Current output 4÷20 mA	7	(+)	active (passive on request)	
	8	(-)		
Communication	9	RS 485 A		
	10	RS 485 B		
	11	RS 485 GND / shield		
2-state input (passive)	12	reverse polarity protection, galvanic insulation		
	13			
2-state output 2	14	reverse polarity protection, galvanic insulation, passive		
	15			

Examples of installation

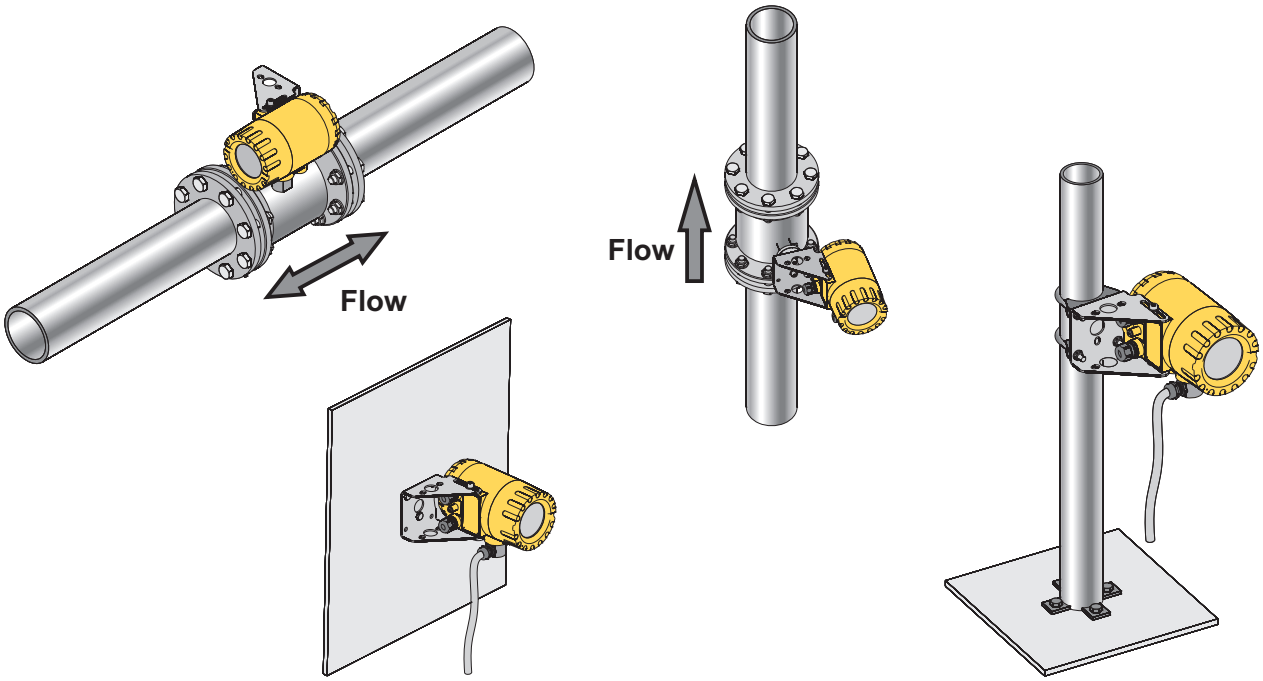

Ordering procedure

PEM-1000ALW /___-___/___/___/___/___/___

PEM-1000NW /___-___/___/___/___/___/___/___/ L =___ m

Nominal diameter: **DN10...1000**
0,5"...40"

Pressure rating: **PN16, ANSI150**

Electrodes material: **316L, Hastelloy**, **Tantalum**

Liner material: **hard rubber, Teflon**

Cable length (standard L=8m)

Special version: **IP68, IP67, 0,2%, Q_{max}, PZH**

Power supply: **90...260 V AC, 10...36 V DC**

Communication: **Modbus RTU/RS 485**

Special versions

IP68 – sensor protection class IP68
IP67 – transmitter protection class IP67
0,2% – accuracy 0,2%

Qmax – non-standard value of Qmax.
PZH – approval for contact with potable water

Electromagnetic flowmeter type PEM-500

- ✓ **Nominal sice: DN 10...300 (ANSI 0,5...12")**
- ✓ **Maximum static pressure 1,6 MPa, 2,5 MPa or 4 MPa**
- ✓ **Accuracy 0,5%**
- ✓ **Output signal 4 ÷ 20 mA, pulse output or frequecy output**
- ✓ **Communication interface Modbus RTU / RS485**

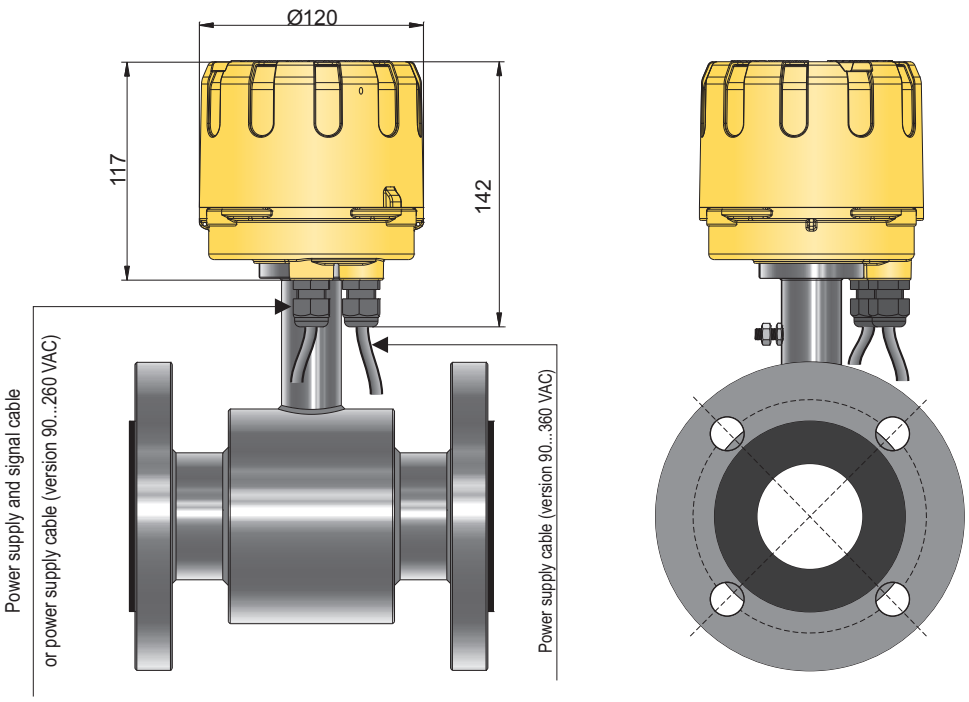

Application and construction

Electromagnetic flowmeter type PEM-500 is applicable to the measurement of flow of the liquids with minimum conductivity of 5ěS/cm. Device measures flow and volume of liquids in both directions of flow. For correct measurement pipe of sensor has to be fully filled by liquid.
Sensor doesn't have any mechanical parts inside flow tube which ensure undisturbed flow of medium. Flowmeter is able to measure flow of medium like pure liquids but also pastes and chemically aggressive liquids.
It's applicable is in water treatment facilities for flow measure of water and wastewater, chemical industry, food industry or heat plants. Compact construction with ingress protection rating IP68 (special version) allows to bury device underground.
Sensors and control unit of electromagnetic flowmeter PEM-500 can't be disconnected by user.
The casing of the control unit is made of aluminium alloy cast. User has no access to the electronic boards. Electrical connection of flowmeter is provided by the factory assembled cables. Wires in cables are marked by colours or numbers (detailed description available in table). Number of cable depends on version of power supply. Version with power supply 90…260 VAC is equipped with two separate cables – signal cable and power supply cable. Version with power supply 10…36 VDC is equipped with one signal-supply cable. In standard flowmeter is equipped with 3m long cables. Other cable length are available on request. As an option PEM-500 flowmeter can be delivered with junction box PP-PEM with ingress protection class IP67 with factory connected flowmeter's cable which allows users connecting cables to terminals.
Flowsensor tube have flanges (which allows to mount sensor in pipeline), inner electrodes and isolating pipe lining (both matched to measured medium). Electrodes in standard are made of stainless steel but as option user can choose other materials appropriate for chemical characteristic of measured medium.

Configuration and communication

Configuration and communication is handled by interface RS485 and Modbus RTU protocol. User can communicate with PEM-500 flowmeter by using PC computer with RS-485/USB converter and software RAPORT 2 or any other software which can refer to registers described in interface's documentation.
User have possibility of programing for example: empty pipe detection, low flow detection, alarms or registering of measured values or events. For visual indication of measurement user can use HMI panels working as Modbus master device.

Dimensions of sensor

PN 16							
	Dimensions [mm]						Estimated weight [kg]
DN	A	B	D1	D2	d	n	
10	200	153	90	60	14	4	5
15		155	95	65	14	4	5
20		160	105	75	14	4	6
25		167	115	85	14	4	7
32		180	140	100	18	4	8
40		185	150	110	18	4	8
50		191	165	125	18	4	9
65		209	185	145	18	4	11
80		224	200	160	18	8	13
100	250	245	220	180	18	8	16
125		276	250	210	18	8	21
150	300	305	285	240	22	8	26
200	350	375	340	295	22	12	36
250	450	430	405	355	26	12	60
300	500	487	460	410	26	12	80

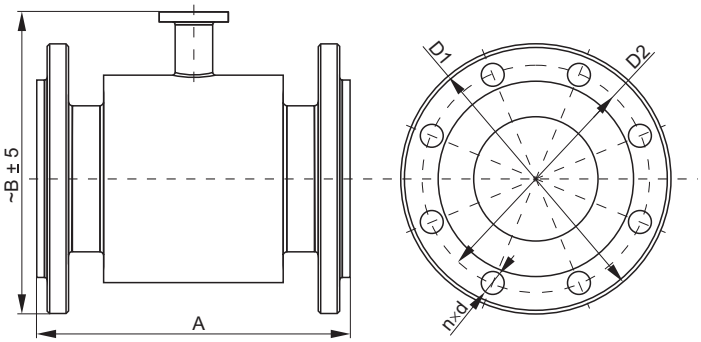

DN 10 – DN 150 A ± 5 mm, DN 200 - DN 300 A ± 10 mm

Recommendations regarding installation

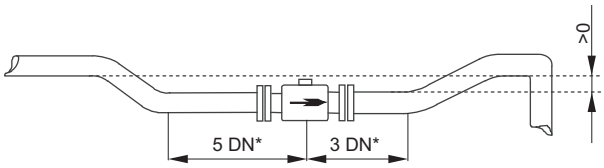

* DN - moninal diameter of sensor

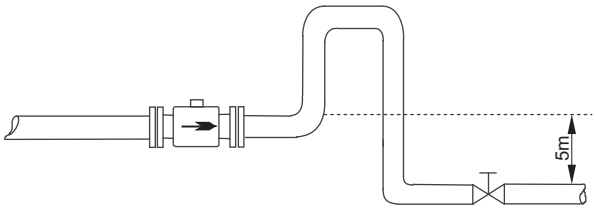

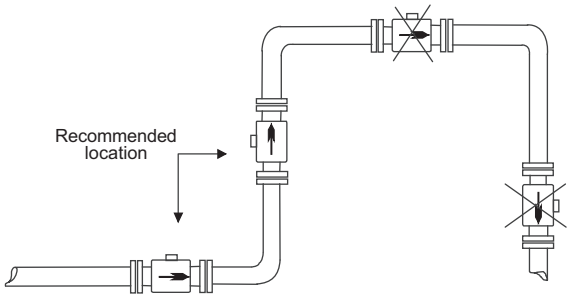

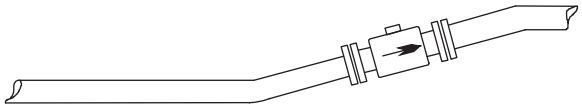

Marking of wires in cables

	Colour	Number**	Description		
Power supply	Blue	3	90….260 VAC	(-)	10…36 VDC
	Brown	4		(+)	
2-state output	Transparent	10	Reverse polarity protection, galvanic insulation, passive		
	Grey	5			
Pulse/frequency output	Pink	8	Reverse polarity protection, galvanic insulation, passive		
	Violet	7			
Current output 4÷20mA	Red	6	(+)	Active (passive on request)	
	Black	2	(-)		
Communication	Black-white	12	RS 485 A		
	Blue-white	13	RS 485 B		
	White	1	RS 485 GND/shield		
2-state input (passive)	Orange	9	Reverse polarity protection, galvanic insulation,		
	Beige	11			
Grounding	Green-yellow	0	Connection inside casing		

**In case of using cable with numbered wires marking according to VDE 0293

Technical details	
Minimal electrical conductivity of the medium	≥ 5μS/cm
Input resistance	≥ $10^{10}\Omega$
Accuracy*	±0,5% of reading at 20...100% $Q_{(10m/s)}$

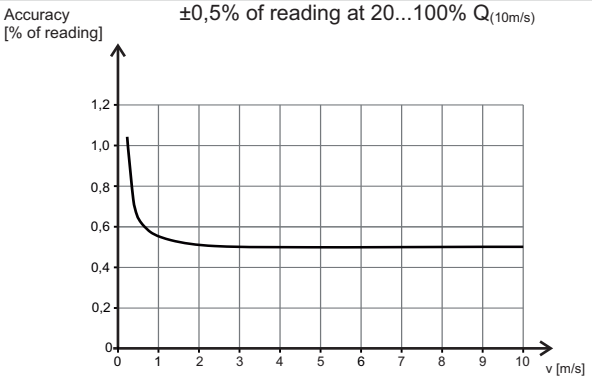

Accuracy in fuction of flow speed

* Reference conditions according to PN-EN 29104:2003

Low flow rejection	Adjustable, any value
Actual flow	Both directions (l/s, m^3/h, m^3/s, other)
Totalizers	3 totalizer: total, positive, negative (m^3, l, other)
Low flow alarm	Adjustable, any value
Configuration	RS485 and Modbus RTU protocol
Empty pipe detection	Cyclic, programmable
Analogue outputs	4…20mA/500Ω, active (passive on request)
Pulse/frequency outputs	max. 24V/10mA DC; 0,1...2000 Hz in frequency mode; up to 500Hz in pulse mode Passive, galvanic insulation, reverse polarity protection
2-state output OC	Open collector. Max. 35V DC /100mA for each output. Galvanic insulation, reverse polarity protection
Communication output	Modbus RTU/RS 485 Galvanic insulation
2-state input	5...35V DC/2 mA Passive, galvanic insulation, reverse polarity protection
Power supply	90...260V AC/ 50Hz/15VA 10...36V DC / 15W (reverse polarity protection)
Ingress protection class Special version	IP67 IP68
Nominal diameters	DN 10...300 ANSI 0.5”...12”
Max. static pressure Special version	1,6 MPa 2,5 MPa, 4 MPa
Process connection	Flanges according to DIN or ANSI
Ambient temperature	-20...60°C
Liner temperature range	Hard rubber -5...90°C Teflon -25...90°C PFA -10...90°C
Electrodes material Special version	316L Hastelloy, Tantalum
Material of lining	Hard rubber DN40...300 Teflon DN15...300 PFA DN10
Material of casing and flanges (sensor)	Carbon steel in protection paint
Accessory	Grounding rings (stainless steel)
Excitation of coils isolation class	E
Measuring principle	Electromagnetic
Weight	0,5 kg (control unit) + weight of the sensor

Choosing of size and measuring range of flowmeter

Choosing the most suitable diameter of senor tube depends on diameter of pipeline where flowmeter will be installed but also on value of flow of liquid in this pipeline. Minimal measuring range for flowmeter corresponds to flow speed 0,3 m/s and maximum measuring range corresponds to flow speed 10 m/s. Optimal and recommended values of measuring ranges correspond with flow speed in range from 2 to 3, 5m/s. Factory setting of measuring ranges considering optimal flow speeds are indicated in below table.
Measurement of flow for linear flow speed less than 0,1m/s is not recommended.

Factory calibration of flowmeters is performed with flow speed 6 m/s. Results of calibration are shown on calibration certificate supplied together with flowmeter.
Flow speed should also consider physical properties of measured liquid. For erosive mediums like water with sand or limewater flow speed below 2 m/s is recommended. Sedimentary liquids like sewage sludge flow speed should be higher than 2 m/s.

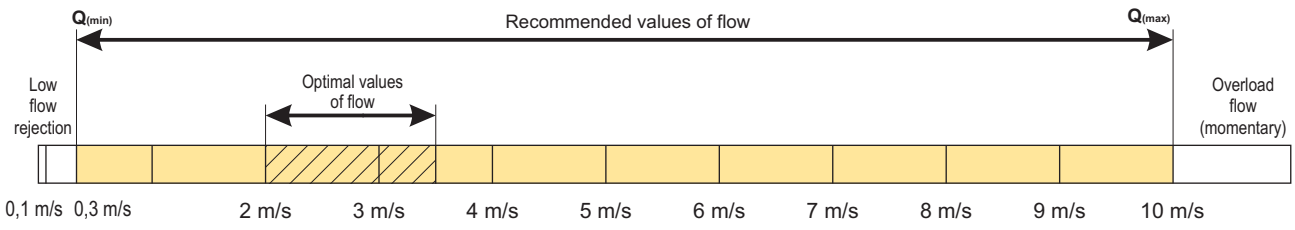

Flow value							
DN	Recommended flow values		Factory setting				
			Analog output 4...20mA		Pulse output		Low flow rejection (v~0,1 [m/s])
	~Q(min)	~Q(max)	Measuring range	Flow speed (for URV)	Volume / pulse	Number of pulses / m³	
	[m³/h]	[m³/h]	[m³/h]	[m/s]	[m³/pulse]		[m³/h]
10	0,08	2,8	0÷1	3,54	0,0000025	400000	0,03
15	0,19	6,4	0÷2	3,14	0,000005	200000	0,06
20	0,34	11	0÷4	3,54	0,00001	100000	0,12
25	0,5	18	0÷5	2,83	0,0000125	80000	0,15
32	0,9	29	0÷10	3,45	0,000025	40000	0,3
40	1,4	45	0÷15	3,32	0,00004	25000	0,45
50	2,1	71	0÷20	2,83	0,00005	20000	0,6
65	3,6	119	0÷30	2,51	0,0001	10000	0,9
80	5	181	0÷50	2,76	0,000125	8000	1,5
100	8	283	0÷100	3,54	0,00025	4000	3
125	13	442	0÷150	3,40	0,0004	2500	4,5
150	19	636	0÷200	3,14	0,0005	2000	6
200	34	1131	0÷360	3,18	0,001	1000	10,8
250	53	1767	0÷500	2,83	0,00125	800	15
300	76	2545	0÷760	2,99	0,002	500	22,8

Ordering procedure

PEM-500 /___-___/___/___/___/___

Nominal diameter: **DN10...300**
0,5"..12"

Pressure rating: **PN16, ANSI150**

Electrodes material: **316L, Hastelloy**, **Tantalum**

Special version: **IP68, L=...m, PP.PEM**

Power supply: **90...260 V AC, 10...36 V DC**

Liner material: **hard rubber, Teflon**

Flange type of nozzle flowmeter ZPK

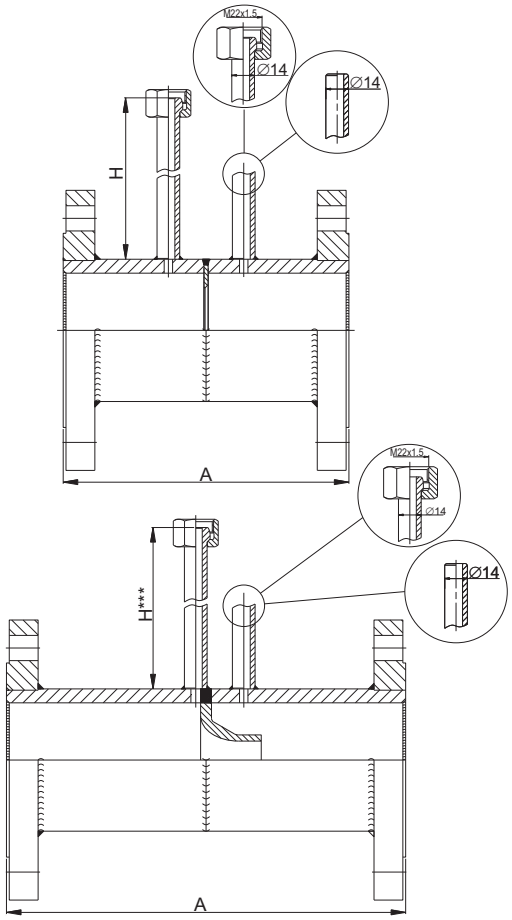

Technical data:

-nominal pressure PN6÷PN100
-size of flowmeter DN25÷DN800
-material of flow element (orifice, nozzle):
stainless steel 1.4301
-material of construction elements:
carbon steel
austenic steel
stainless steel
-temperature up to 500°C
-material certification
-calculation acc. to PN-EN ISO 5167, ISO/TR 15377

Application:

Nozzle flowmeter is used for flow measurement of liquid medium in close pipeline.
An orifice plate installed in line creates a pressure drop. This difference of pressure is measured via impulse line by differential pressure transmitter. The relationship between the rate of flow and pressure drop is very well known and allows to easily convert measured pressure difference to flow value.
Flowmeters without correction are used for mediums with constant values of pressure and temperature.
For custody transfer measurement it's recommend to use differential pressure transmitters without SQRT characteristic and correction from changes of medium's pressure and temperature. This kind of measurement have to be calculated in dedicated flow counters.
Characteristic:
- high accuracy of measurement in wide range of flow
- resistant for aggressive media
- work in wide range of temp. and pressure

DN	25	32	40	50	65	80	100	125	150	200	250	300	350	400	500	600	800
A	150			200			250		300	350	400	500		600			800

Version with straight sections and flanges for screwing

Ordering procedure:

ZPK – K – DN100 – PN16 – P265GH – 1.4301 – M22x1.5

- M22x1.5: Type of mounting elements: ∅**14**, **M22x1,5**, other
- 1.4301: Flowelement material: **304** or other
- P265GH: Material of pipe and flange: **P265GH**, **304** or other
- PN16: Nominal pressure PN
- DN100: Size DN
- K: Type of flowelement: **K** - orifice, **D** - nozzle, **Kkw** - square orifice
- ZPK: Version of flowmeter

Welded type of nozzle flowmeter ZPR

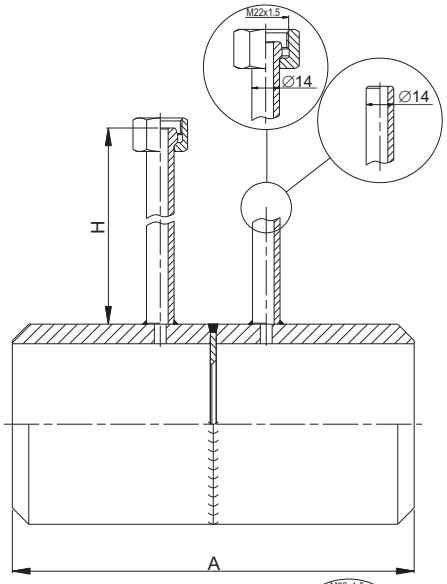

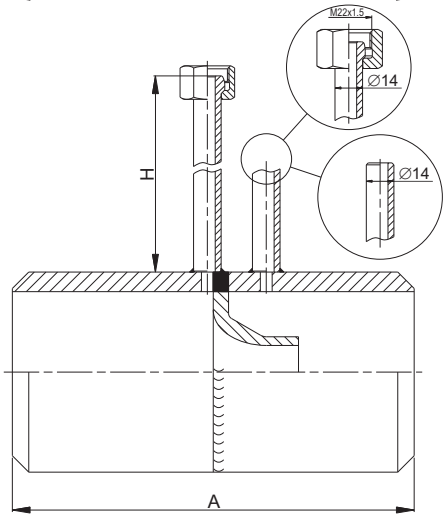

Technical data:

-nominal pressure PN6÷PN100
-size of flowmeter DN25÷DN800
-material of flow element (orifice, nozzle):
  stainless steel 1.4301
-material of construction elements:
  carbon steel
  austenic steel
  stainless steel
-temperature up to 500°C
-material certification
-calculation acc. to PN-EN ISO 5167, ISO/TR 15377

Application:

Nozzle flowmeter is used for flow measurement of liquid medium in close pipeline.
An orifice plate installed in line creates a pressure drop. This difference of pressure is measured via impulse line by differential pressure transmitter. The relationship between the rate of flow and pressure drop is very well known and allows to easily convert measured pressure difference to flow value.
Flowmeters without correction are used for mediums with constant values of pressure and temperature.
For custody transfer measurement it's recommend to use differential pressure transmitters without SQRT characteristic and correction from changes of medium's pressure and temperature. This kind of measurement have to be calculated in dedicated flow counters.
Characteristic:
- high accuracy of measurement in wide range of flow
- resistant for aggressive media
- work in wide range of temp. and pressure

Ordering procedure:

ZPR – K – DN100 – PN16 – P265GH – 1.4301 – M22x1.5 – 500 – 80

- 80: Size H
- 500: Size A
- M22x1.5: Type of mounting elements: ∅**14**, **M22x1,5**, other
- 1.4301: Flowelement material: **304** or other
- P265GH: Material of pipe and flange: **P265GH** or other
- PN16: Nominal pressure PN
- DN100: Size DN
- K: Type of flowelement: **K** - orifice, **D** - nozzle, **Kkw** - square orifice
- ZPR: Version of flowmeter

Orifice flowmeter with assembling element ZPS

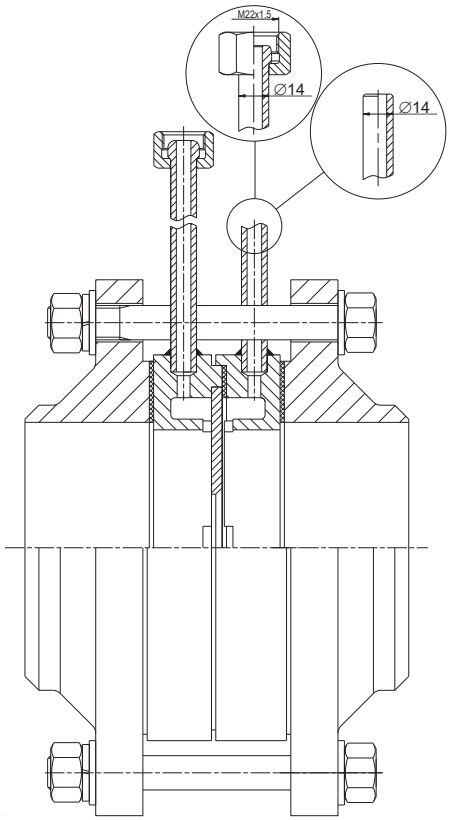

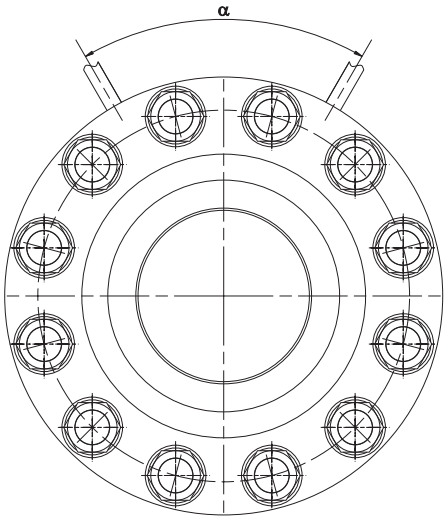

Technical data:

-nominal pressure PN6÷PN100
-size of flowmeter DN25÷DN800
-material of flow element:
stainless steel 1.4301
-material of construction elements:
carbon steel
austenic steel
stainless steel
-temperature up to 500°C
-material certification
-calculation acc. to PN-EN ISO 5167, ISO/TR 15377

DN	angle spacing between measuring points α							
	medium, gas							Steam
	nominal pressure							PN
	PN6	PN10	PN16	PN25	PN40	PN63	PN100	6, 10, 16, 25 40, 63, 100
25÷50	135°	135°	135°	135°	135°	135°	135°	0°, 90°, 180°
65				90°	90°	90°	90°	
80	90°	90°	90°					
100								
125								
150							60°	
200			60°	60°	60°	60°		
≥250	60°	60°	60°					

Application:

Measurement based on orifice plate with differential pressure trassmitter is most widely used type of flow measurement. It can be used in flow measurement of steam, water and gases.

The biggest advantages of this soultion are:
- high accuracy in wide measuring ranges
- applicable to measure flow of neutral and agressive mediums
- easy calibration

Ordering procedure:

ZPS – K – DN100 – PN16 – P265GH – 1.4301 – 90° – M22x1.5

- M22x1.5: Type of mounting elements: ∅**14**, **M22x1,5**, other
- 90°: Angle spacing between measuring points
- 1.4301: Flowelement material: **304** or other
- P265GH: Material of casing and flange
- PN16: Nominal pressure PN
- DN100: Size DN
- K: Type of flowelement: **K** - orifice, **Kkw** - square orifice
- ZPS: Version of flowmeter

Venturi type flowmeter ZPV

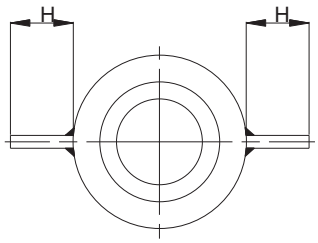

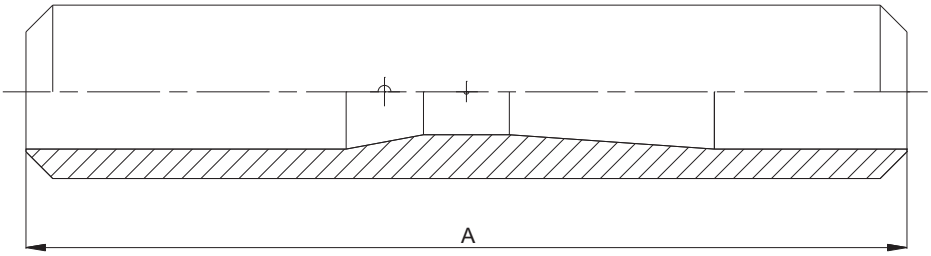

Technical data:

-nominal pressure PN6÷PN160
-size of flowmeter DN65÷DN800
-material of flow element (orifice, nozzle):
stainless steel 1.4301
-material of construction elements:
carbon steel
austenic steel
stainless steel
-temperature up to 600°C
-material certification
-calculation acc. to PN-EN ISO 5167

Application:

Venturi flowmeter is used for flow measurement of liquid medium in close pipeline. An orifice plate installed in line creates a pressure drop. This difference of pressure is measured via impulse line by differential pressure transmitter. The relationship between the rate of flow and pressure drop is very well known and allows to easily convert measured pressure difference to flow value.
Flowmeters without correction are used for mediums with constant values of pressure and temperature.
For custody transfer measurement it's recommend to use differential pressure transmitters without SQRT characteristic and correction from changes of medium's pressure and temperature. This kind of measurement have to be calculated in dedicated flow counters.

Characteristic:
- high accuracy of measurement in wide range of flow
- resistant for aggressive media
- work in wide range of temp. and pressure

Ordering procedure:

ZPV – Dn100 – PN63 – P91

- P91: Material of measuring element
- PN63: Nominal pressure PN
- Dn100: Size DN
- ZPV: Version of flowmeter

Pitot Tube Flow Sensor Type PRP

- ✓ **Long-term accuracy**
- ✓ **Low installation costs**
- ✓ **Short up/down straight pipe run requireme**
- ✓ **Low permanent pressure loss**
- ✓ **Cost effective**
- ✓ **Maintenance-free**
- ✓ **Bi-directional flow measurement**

Measuring Principle

The PRP Sensor is a Pitot tube based flow Sensor which belongs to the family of primary flow Elements! These devices measures the flow in pipes and ducts by using the differential pressure principle based on the basics of Bernoulli. The flow calculation is similar the calculation according to EN ISO 5167-1. A rectangular design of the PRP sensor profile is divided diagonally into two symmetrically constructed chambers with sensing holes (dp-tappings). The chamber facing to the upstream generate a higher pressure (p+) and the chamber in the downstream a lower pressure (p-). Several dp-tappings along the sensor profile provide a steady averaging of the flow velocity. This facilitates exact metering even with irregular flow profiles. Each chamber is connected to the corresponding side of a differential pressure transmitter. The value of the differential pressure is the measure to determine the flow. With increasing flow the dp increases. A differential transmitter converts the dp into an electrical signal (i.e. 4-20mA) that is transmitted to the process control system..

Performance

Accuracy	1,0% of flow
Repeatability	± 0,1 % of actual value
Measuring relation	10:1

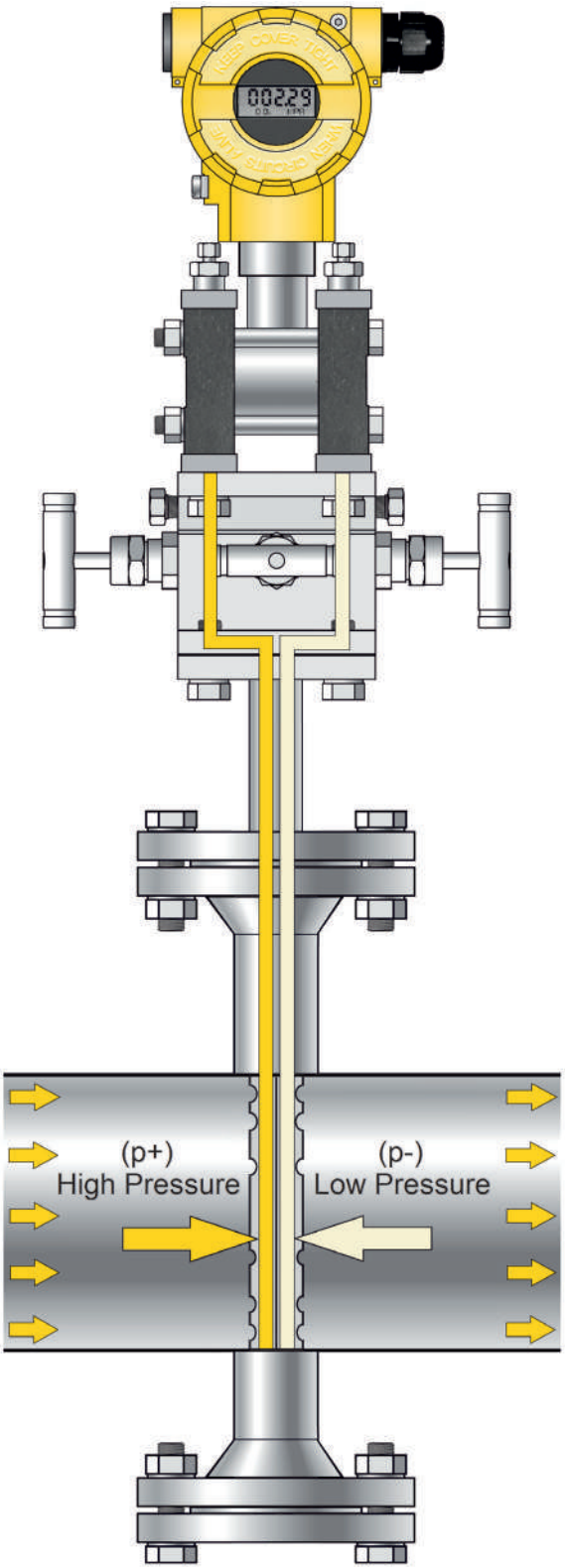

Fig. 1
PRP-F22 Sensor with flanged end support

Technical specification:

- Pipe diameters: 40 to 2500 mm
- Operating pressure: up to PN100
- Operating temperature: -50° C to +450°C
- Sensor material : Stainless steel M.-Nr. 1.4571 (316Ti)
- Differential pressure ports: ˝ ˝ NPT, R ˝ ˝ flange plate
- Process connection: welded coupling, flanged version (DIN, ANSI)
- End support: Pipe thread with cap, flanged version (DIN, ANSI)

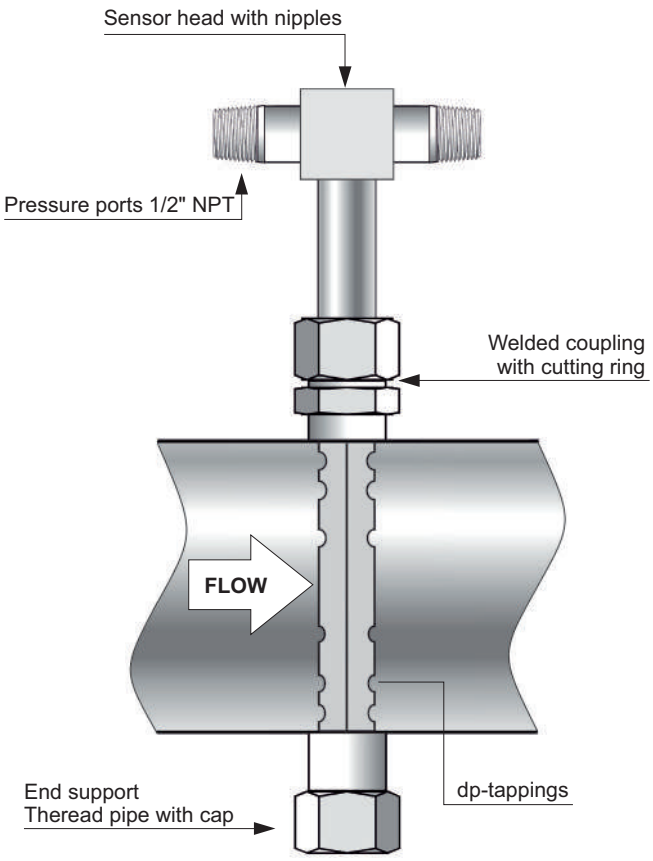

Fig. 2
PRP-M22 Sensor

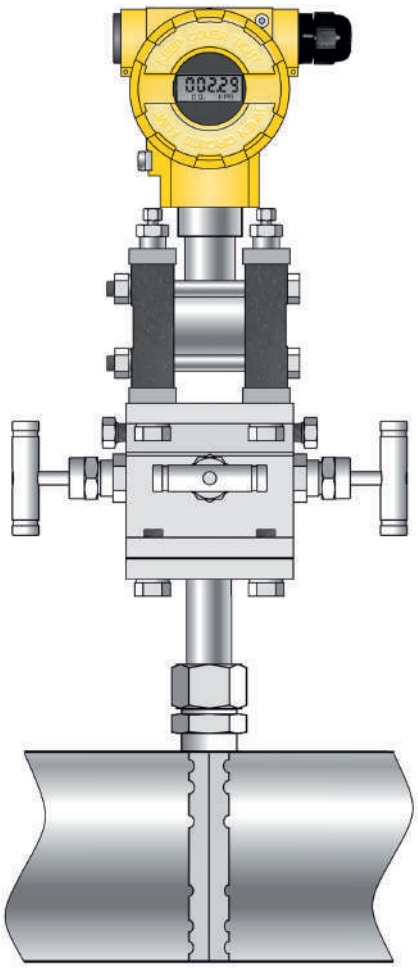

Fig. 3
PRP-M10 Sensor with flange plate
for direct transmitter mounting

For technical offer please fulfill form available on our website.
The following information will be needed:

- Medium
- Density
- Operating pressure
- Operating temperature
- Flowrate
- Process connection
- Pipe diameter and wall thickness
- Insulation thickness
- Pipe orientation
- Direct mount / remote mount transmitter

Notes

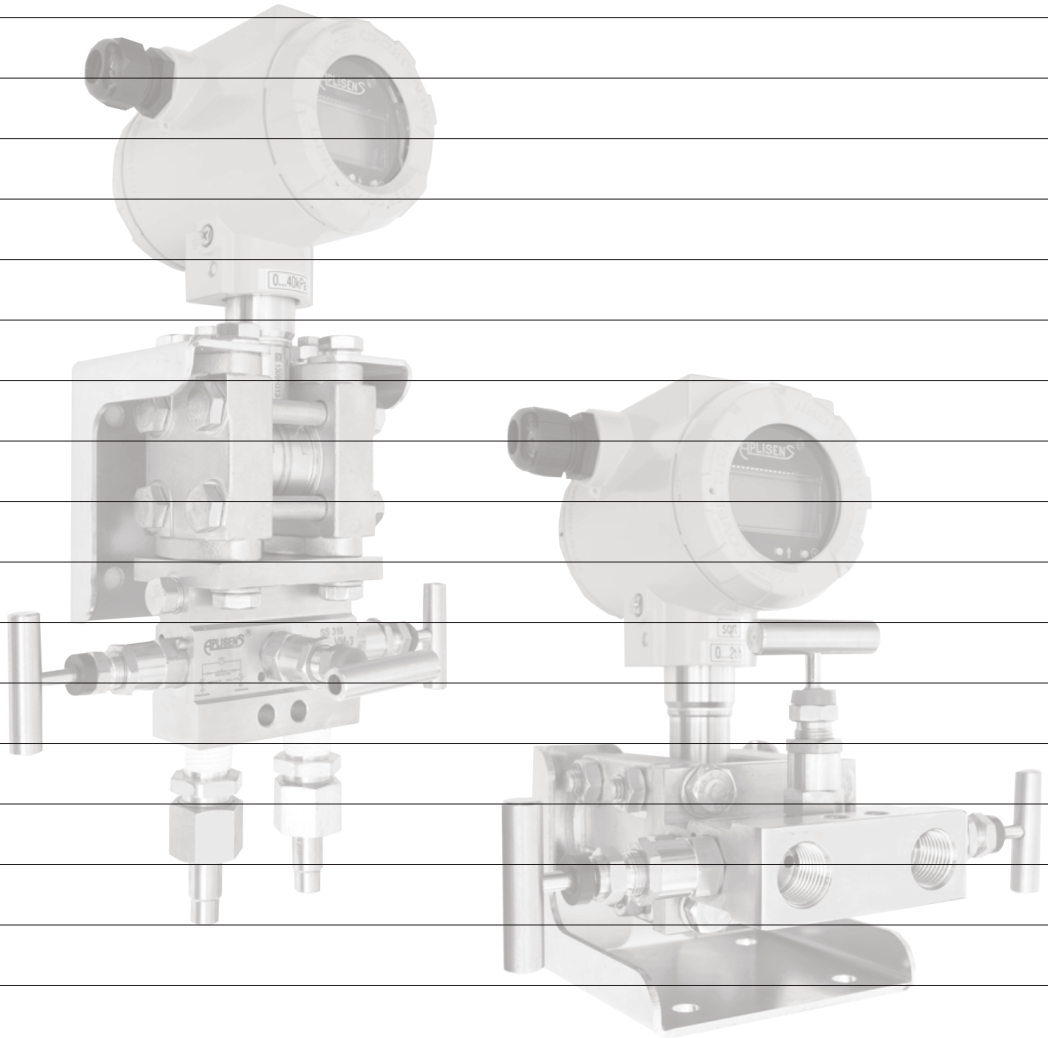

Chapter IX

Temperature transmitters

Smart temperature transmitter APT-2000ALW ..... IX/ 2

Smart temperature transmitter LI-24ALW ..... IX/ 5

Temperature transmitter PT-25..... IX / 9

Smart temperature transmitters LI-24L..... IX/ 10

Temperature transmitter ATL ..... IX/ 11

Temperature transmitter LI-24G ..... IX/ 12

Temperature transmitter AT-2 ..... IX/ 13

Temperature transmitter ATX-2 ..... IX/ 14

Temperature transmitter GI-22-2, GIX-22-2..... IX/ 15

Smart temperature transmitter
APT-2000ALW

HART COMMUNICATION PROTOCOL

- ✓ 4…20 mA output signal + HART protocol
- ✓ Programmable range, zero shift, characteristic and damping ratio with local panel keys
- ✓ Intrinsic safety (ATEX), Explosion proof (ATEX, IECEx) version
- ✓ Resistant or thermocouple measuring element
- ✓ MID (Measuring Instruments Directive) – certificate acc. to 2004/22/WE directive and OIML R140:2007 recommendations.

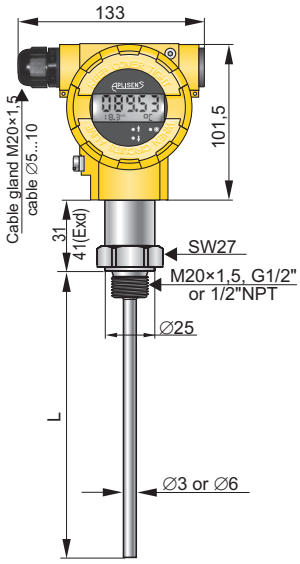

APT-2000ALW/GB

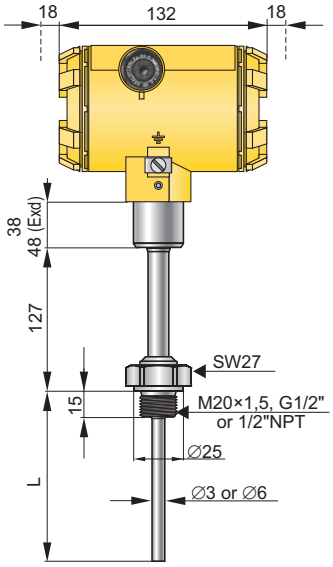

APT-2000ALW/GN

Thermowell

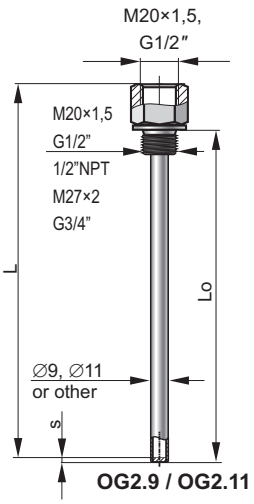

OG2.9 / OG2.11

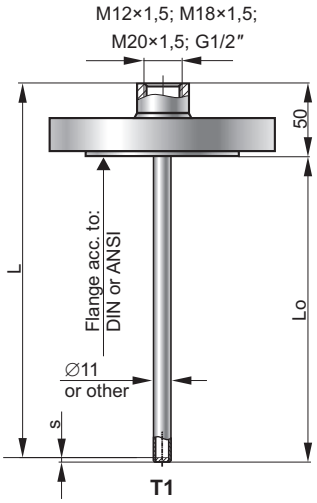

T1

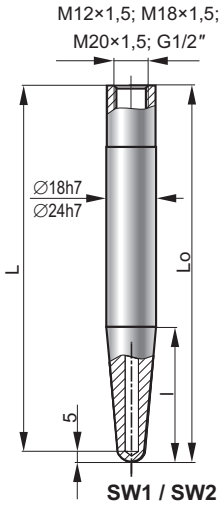

SW1 / SW2

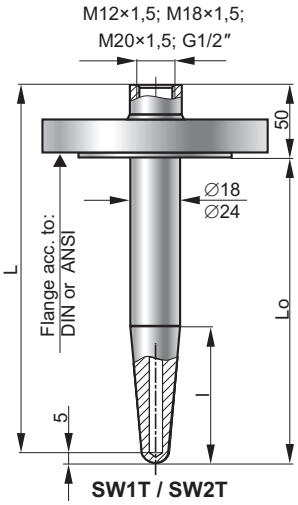

SW1T / SW2T

Technical data

Metrological parameters

Error (digital value)
Standard version:
± (0,2 + 0,002·|t|)°C for Pt100
± 1,5°C for TC K and t ≤ 375°C
± (0,004·t)°C for TC K and t > 375°C

Version with better accuracy (version KT):
± (0,05 + 0,05%·z +0,001·|t|)°C for Pt100
± (0,5 + 0,05%·z)°C for TC K and t ≤ 375°C
± (0,5 + 0,05%·z+ 0,002·(t-375))°C for TC K and t > 375°C

Additional error for analog output ±0,04%·z
where:
|t| – absolute value of the measured temperature °C
t - value of the measured temperature °C
z – transmitter setting range °C

Measuring range

Sensor type	Min set range	Nominal range
Pt100	10°C	-70…500°C*
K	10°C	-40…550°C

* for GB version -50…150°C

Electrical parameters

Power supply 12...55 V DC (Ex 13,5...28 V)
Additional voltage drop when display illumination switched on 3 V

Output signal 4...20 mA + Hart protocol

Resistance required for communication (HART) min. 240Ω

Load resistance $R[\Omega] = \frac{U_{ZAS}[V] - 12V\,*}{0{,}0225A}$

* – 15 V when display illumination switched on

Operating conditions

Ambient temperature -40...85°C
for version with Ex ia -40...80°C
for version with Ex d -40…75°C

Min. immersion length **L=100mm**

Materials

Casing Aluminum,
316Lss- special version
Sensor material 321ss
Thermowell according to table page.

Communication and configuration

The communication standard for data interchange with the transmitter is the Hart protocol.
Communication with the transmitter is carried out with:
– Hart type communicators,
– a PC using an HART/USB converter and Raport 2 configuration software.
The data interchange with the transmitter enables the users to:

- identify the transmitter;
- configure the output parameters:
- read the currently measured temperature value of the output current and the percentage output control level;
- force an output current with a set value;
- calibrate the transmitter in relation to a model temperature.

Standard thermowell data

Thermowell type		Standard dimensions of thermowell						Thermowell material	Available process connection	
		∅[mm]		L[mm]		l[mm]				
OG2.9		9x1		100, 160, 250, 400		-		316Lss	M20x1,5; G1/2''; 1/2''NPT	
OG2.11		11x2		100, 160, 250, 400		-		316Lss	M20x1,5; G1/2''; 1/2''NPT	
T1		11x2		100, 160, 250, 400		-		316Lss	Flange according to DIN and ANSI	
SW1	SW2	18h7	24h7	100 140 200	140 200	35 65 65	65 65	15HM, 10H2M 316Lss	-	
SW1T	SW2T	18h7	24h7	100 140 200	140 200	35 65 65	65 65	15HM, 10H2M 316Lss	Flange according to DIN and ANSI	
SW1G	SW2G	18h7	24h7	100 140 200	140 200	35 65 65	65 65	15HM, 10H2M 316Lss	M20x1,5, G1/2"	M27x1,5, G3/4"

Ordering procedure

APT-2000ALW/___/___/___/___/ L = ... mm /___/___÷___°C/___/___

Special version:
Exia - ATEX certificate
Ex II 1/2G Ex ia IIC T4/T5/T6 Ga/Gb

Exia(Da) - ATEX certificate
Ex II 1/2G Ex ia IIC T4/T5/T6 Ga/Gb
II 1D Ex ia IIC T105ºC Da
I M1 Ex ia I Ma (version with SS housing)

Exd - ATEX certificate
Ex II 1/2G Ex ia/d IIC T* Ga/Gb
II 1/2D Ex ia/t IIIC T* Da/Db
I M2 Exd ia I Mb (version with SS housing)

IECEx Ex ia/d IIC T* Ga/Gb
Ex ia/t IIIC T* Da/Db
Wx ia I Mb (version with SS housing)

T* - temperature class transmitter (for gas)
or maximum surface teperature (for dust)

SS - Housing material 316SS
KT - execution with higher accuracy
IP67, IP66/67

Version: **GB, GN**

Thermowell type: according to table

Type of thread of flange connection:
M20×1,5; G1/2"; 1/2"NPT or flange

Immersion length

Type of measuring element: **Pt100, K**

Set measuring range

Alarm signal: 3,8 or 23 mA

Elcetrical connection: **without marking** (M20x1,5) or **US** (1/2"NPTF)

SMART TEMPERATURE TRANSMITTER APT-2000ALW with MID

Application

Smart temperature transmitters APT-2000ALW MID is applicable to the measurement of the temperature in application designed according to directive 2004/22/WE (MID), harmonized standard PN-EN12405-1:2005 + A2:2010 and recommendation OIML R140:2007. Device subcomponent suitable for custody transfer measurement of gas with MID approval. Mechanical construction and installation of the transmitter enclosure shall comply with the transmitter APT-2000ALW are described on page IX/ 2, IX/ 3 of catalogue. Transmitter due to factory blockade of transmitter's configuration cannot be configurable by user. Electrical connection of the transmitter is according to drawing on page IX/ 3. Available are only terminals SIGNAL + and SIGNAL -. Temperature transmitter APT-2000ALW MID are produce with GB type of sensor and with resistant sensor Pt100.

Metrological parameters

Max. permissible error according to EN12405-1
(calculated in relation to the measured value)

- in reference conditions 20±3°C(±1 during the measurement)	≤ 0,1%
- nominal operating conditions	< 0,2%
- special version	< 0,1%
Long-term stability	< 0,2% / 5 years
Operating temperature range	-25...55°C
Immersion length	150...290mm
Power supply	Exia: 13,5...28VDC Exd: 13,5...45VDC

MID Parts Cerfificate No. 28/12
Exia: Ex II 1/2G Ex ia IIC T4/T5/T6 Ga/Gb
Exd: Ex II 1/2G Ex ia/d IIC T* Ga

Measuring range

Measuring range: -20...60°C

Ordering procedure

APT-2000ALW/MID/___/___/ L = ... mm

Special version:
Exia - Intrinsic safety version (ATEX)
Exd - Explodion proof version (ATEX)
SS - Housing material 316SS

Process connection type: **M20x1,5 , G1/2"**

Immersion length

Smart temperature transmitter
LI-24ALW

- ✓ **Output signal 4…20mA with Hart protocol**
- ✓ **Galvanic insulation (In, Out)**
- ✓ **Programmable sensor type**
- ✓ **Programmable measuring range**
- ✓ **Thermoresistance line compensation**
- ✓ **Compensation of thermocouple cold junction**
- ✓ **Autodiagnostic system**
- ✓ **Intrinsic safety certificate (ATEX, IECEx)**
- ✓ **Explosion proof certificate (ATEX, IECEx)**
- ✓ **Safety version SIL2/SIL3**

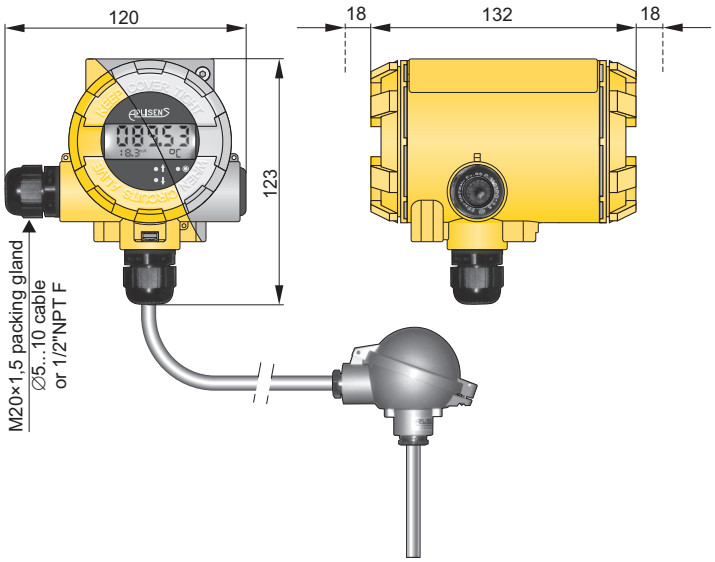

LI-24ALW with remote mounted temperature sensor

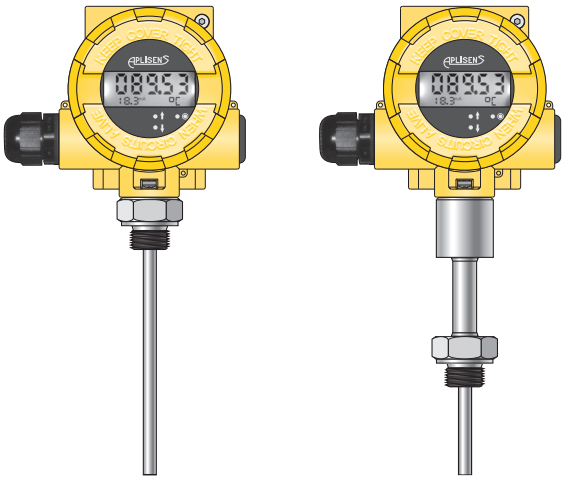

LI-24ALW with direct mounted temperature sensor

Application and function

The temperature transmitter LI-24ALW is applicable to converting resistance of temperature or voltage of thermocouple sensor to standard current signal 4-20mA. The transmitter has two separate channels enabling measurement of temperature difference, averange, averange with redundancy, max. or min. temperature. Transmitter has compensation of ambient temparature influence and compensation of thermocouple cold junction using internal/external (Pt100) sensor or constant temperature. Most of parameters such as: sensor type, measuring range, current alarm signal when electric circuit is broken, output characteristic correction, user characteristic (60 points) are programmed using PC with HART/USB converter and Aplisens RAPORT 2 configuration software. For request Aplisens can set temperature transmitter parameters like measuring range, type of sensor. Their values are printed on label. Transmitter LI-24/ALW is designed for field use. LI-24ALW can be used with temprature sensors mounted directly in transmitter's casing or with external sensors connected with cable.

Technical data

Input signal	Resistance: Pt100,Ni100 Voltage: K, J,S,B,N,T, R, E
Limit process	-10mV< E<100mV or -100mV< E<1000mV 0Ω<R<400Ω or 0Ω<R<2000Ω
Min. measuring range	10mV or 10Ω or 10K
Output signal	4 - 20 mA + Hart
Power supply	13,5*…55 VDC Exia: 13,5*…30 VDC Exd: 13,5*…45 VDC Safety, Safety Exd: 12,5…36 VDC Safety Exia: 12,5…30 VDC *- with display illumination switched on +3V, display backlight can be switched on only during production
Max. wires resistance	500Ω
Alarm signal	3,75mA / 21,5mA (NORMAL) or 3,6 mA / 21 mA (NAMUR NE89) or setting by user
Sensor current	0,42mA Safety: 0,25mA
Galvanic insulation	Optoelectrical
Accuracy	acc. to below table
Time constant	0,3s
Additional electronic damping	0..30s
Ambient temperature	-40…+80°C Exia: -40…+80°C Exd: -40…+75°C Safety: -40…+85°C Safety Exia, Safety Exd: -40…+75°C

LI-24ALW/Safery can be programed only with HART protocol. Local buttons allows only to change display settings.

Type of input signals and metrological parameters

RTD sensors

Thermal resistance sensors	2, 3 or 4 wires connection
Sensor current	~250 µA
Maximum wires resistance	25 Ω

Sensor type	Basic range (FSO)	Min. range span
	°C	K
Pt100	-200÷850	10
Pt200	-200÷850	10
Pt500	-200÷850	10
Pt1000	-200÷266	10
Ni100	-60÷180	10
Cu100	-50÷180	10

Resistance (resistor, potentiometer)

	Ω	Ω
Measuring range No.1	0÷400	10
Measuring range No. 2	0÷2000	10

Thermocouples

Input impedance	>10MΩ
Maximum wires resistance	500 Ω (wires + thermocouple)
Cold junctions compensation	Internal sensor, external sensor Pt100, constant value

Sensor type	Basic range (FSO)	Min. range span
	°C	K
B	500÷1820	50
E	-150÷1000	50
J	-210÷1200	50
K	-150÷1372	50
N	-150÷1300	50
R	50÷1768	50
S	50÷1768	50
T	-150÷400	50
Czujnik wewnętrzny CJC	-25÷75	-

Voltage

	mV	mV
Measuring range No.1	-10÷100	10
Measuring range No. 2	-100÷1000	10

Electrical diagrams

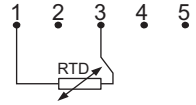

RTD
2-wires connection

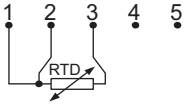

RTD
3-wires connection

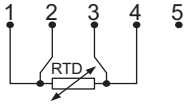

RTD
4-wires connection

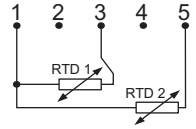

2 × RTD
2-wires connection

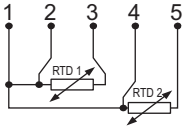

2 × RTD
3-wires connection

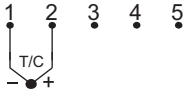

Thermocouple

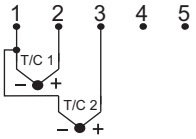

2 x Thermocouple

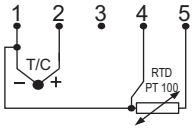

Thermocouple
with external
CJC

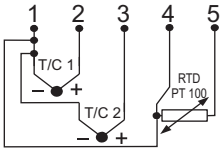

2 x Thermocouple
with external
CJC

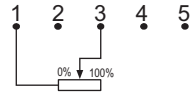

Potentiometer
2-wires connection

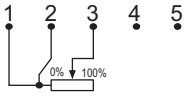

Potentiometer
3-wires connection

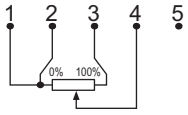

Potentiometer
4-wires connection

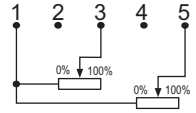

2 × Potentiometer
2-wires connection

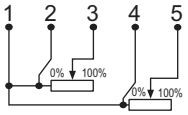

2 × Potentiometer
3-wires connection

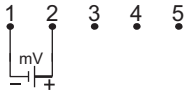

Voltage source

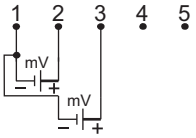

2 x Voltage source

Direct mounted sensors

WOGN

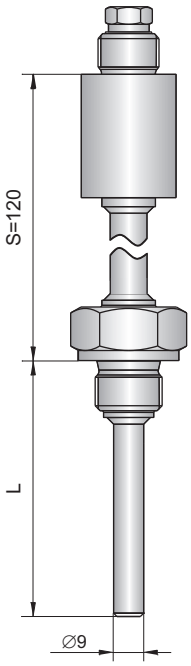

WOGB

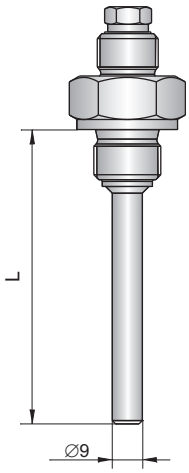

WRGN

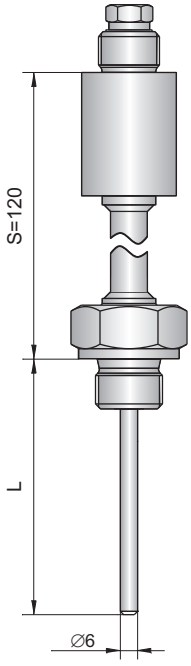

WRGB

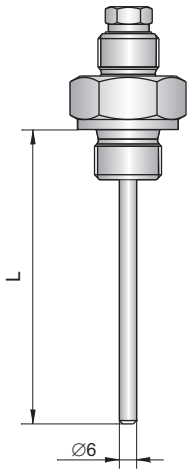

Sensor type	Standard dimensions of sensor			Sensor material	Available process connection
	∅[mm]	L[mm]	S[mm]		
WOGN	9	100, 160, 250, 400	120	316ss	M20x1,5; G1/2''; 1/2''NPT
WOGB	9	100, 160, 250, 400	-	316ss	M20x1,5; G1/2''; 1/2''NPT
WRGN	6	100, 160, 250, 400	120	316ss	M20x1,5; G1/2''
WRGB	6	100, 160, 250, 400	-	316ss	M20x1,5; G1/2''

WOGN, WOGB - welded sensors; WRGN, WRGB - spring-loaded sensors (to use with additional thermowell)

Ordering code

Model	Code	Description
LI-24		Smart pressure transmitter
Versions	/ALW…… /ALW/Safety……	With display, output 4-20mA + Hart With display, output 4-20mA + Hart Functional Safety certificate according to PN-EN 61508:2010 parts 1 ÷ 7, PN-EN 61511-1:2017-07 + PN-EN 61511-1:2017/A1:2018-03, PN-EN 62061:2008 + PN-EN 62061:2008/A1:2013-06 + PN-EN 62061:2008/A2:2016-01
Certificates, options*	/SS…… /Exia……	Stainless steel housing Ex II 2(1)G Ex ia [ia Ga] IIC T4/T5/T6 Gb II 1/2G Ex ia IIC T4/T5/T6 Ga/Gb (with direct sensor) Safety version: II 2(1)G Ex ia [ia Ga] IIC T4 Gb IECEx Ex ia [ia Ga] IIC T4/T5/T6 Gb Ex ia IIC T4/T5/T6 Ga/Gb (with direct sensor) Safety version: Ex ia [ia Ga] IIC T4 Gb
	/Exia (Da)……	Ex II 2(1)G Ex ia [ia Ga] IIC T4 Gb II 1D Ex ia IIIC T105°C Da I M1 Ex ia I Ma (with 316ss case) IECEx Ex ia [ia Ga] IIC T4 Gb Ex ia IIIC T105°C Da Ex ia I Ma (with 316ss case)
	/Exd……	Ex With remote sensor: II 2(1)G Ex db [ia Ga] IIC T5/T6 Gb II 2(1)D Ex tb [ia Da] IIIC T100°C/T85°C Db I M2 Ex db [ia Ma] I Mb (with 316ss case) With direct sensor WO…/WR…: II 2G Ex db IIC T**/T5/T6 Gb II 2D Ex tb IIIC T*/T100°C/T85°C Db I M2 Ex db I Mb (with 316ss case) Safety version: II 2G Ex db IIC T**/T5/T6 Gb II 2D Ex tb IIIC T*/T100°C/T85°C Db I M2 Ex db I Mb (with 316ss case) With remote sensor: Ex db [ia Ga] IIC T5/T6 Gb Ex tb [ia Da] IIIC T100°C/T85°C Db Ex db [ia Ma] I Mb (with 316ss case) With direct sensor WO…/WR…: IECEx Ex db IIC T**/T5/T6 Gb Ex tb IIIC T*/T100°C/T85°C Db Ex db I Mb (with 316ss case) Safety version: Ex db IIC T**/T5/T6 Gb Ex tb IIIC T*/T100°C/T85°C Db Ex db I Mb (with 316ss case) Packing gland available on request
* more than one option is available	/IP67…… /US……	Protection class IP67 Electrical and sensor connection ˝ "NPTF
Type of measuring element	/……	Type of measuring element according to tables from page IX/7
Measuring set range	/……	Measuring range
Sensor type (optionally)	/(none)	Without sensor
	/code of direct sensor	Direct mounted sensor according to below table

Type of sensor	WOGN……	Sensor with threaded process connection, diameter of sensor 9mm, neck S=120mm, wetted parts 316ss
	WOGB……	Sensor with threaded process connection, diameter of sensor 9mm, 316ss
	WRGN……	Spring loaded sensor with threaded process connection, neck S=120mm, wetted parts 316ss
	WRGB……	Spring loaded sensor with threaded process connection, wetted parts 316ss
Special version	/Exia……	Intrinsic safe version
	/Exd……	Explosion proof version
Length of sensor	/L=…mm	Required length of immersion [mm]
Neck extension	/S=…mm	Required length of neck [mm] (if different than standard)
Process connection		Thread type
Type of measuring element		Type of measuring element
Sensor material		Sensor material (if different than standard)
Connection thread between sensor and transmitter		Thread between sensor and transmitter

NEW

Temperature transmitter type PT-25

- ✓ **Output signal 4 ÷ 20mA**
- ✓ **Stainless steel casing and wetted parts**
- ✓ **Factory configured**

Application and construction

Temperature transmitter type PT-25 is designed for temperature measurement of liquid and gaseous media in range from -50 to +100°C. Resistance signal from RTD element is converted to standard 4…20mA output signal. Casing of transmitter and wetted parts are made in stainless steel. Transmitter is manufactured in two versions: with removable measuring insert and not removable measuring insert which has additional protection against vibrations. Available electrical connections are angular connector DIN EN 175301-803 or connector M12x1.

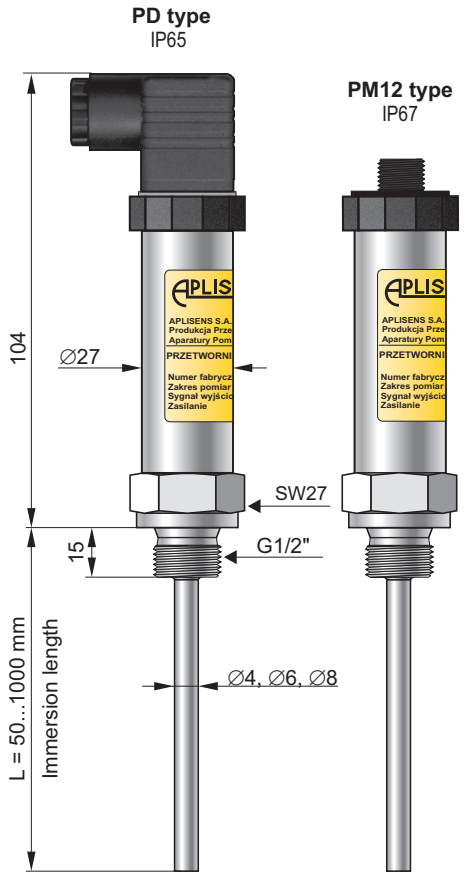

Technical data

Output signal	4...20mA
Measuring range	0...50°C, 0...100°C, -50...50°C, -50...100°C, 25...75°C, 50...100°C other on request
Minimum span	25K
Accuracy	± 1%
Power supply	8...35 V DC
Alarm signal	<3,1mA or >26,1mA
Wetted parts material	316
Sensor diameter	∅4, ∅6, ∅8mm
Process connection	G1/2", other on request
Immersion length	50...1000mm
Extension neck	on request
Ingress protection	PD - IP65, PM12 - IP67

Ordering procedure

PT-25/___/L = ... mm/___/___/___/___/__÷__°C/___

- Electrical connection: **PD** (connector DIN EN 175301-803) **PM12** (connector M12x1)
- Immersion length: **L=...mm** (standard: 50, 100, 150, 200, 250 mm other length on request)
- Diameter of sensor: 4, **6**, **8 mm**
- Connection thread: **G1/2"**, other on request
- Measuring range
- Alarm signal: **23 mA**
- Measuring instert: **R** - removable, **NR** - not removable

Rail-mounted smart temperature transmitters type LI-24L

- ✓ **Galvanic insulation (In, out)**
- ✓ **Programmable sensor type**
- ✓ **Programmable measuring range**
- ✓ **Thermoresistance line compensation**
- ✓ **Compensation of thermocouple cold junction**
- ✓ **Output signal 4…20mA + Hart protocol**
- ✓ **Ambient temperature from -25 to +75 °C**
- ✓ **Hart protocol**
- ✓ **Autodiagnostic system**
- ✓ **Safety version SIL2/SIL3**
- ✓ **Intrinsic safe version** Ex I M1 Ex ia I Ma II 1G Ex ia IIC T4/T5 Ga **IECEx** Ex ia I Ma Ex ia IIC T4/T5 Ga

HART COMMUNICATION PROTOCOL

SIL2/SIL3 Safety version

Technical data

Input signal	K, J, S, B, N, T, R, E voltage Pt10, Pt50, Pt100, Pt200, Pt500, Pt1000, Ni100, Cu100, resistance
Limit process	- 10mV< E<100mV or -100mV< E<1000mV 0Ω<R<400Ω or 0Ω<R<2000Ω
Min. measuring range	10mV or 10Ω
Output signal	4...20mA + HART
Power supply	10…36V DC Safety: 10...30V DC Ex, Safety Ex: 10...30V DC
Max. Wires resistance	500Ω
Alarm signal	21,6mA or 3,75 mA or setting by user
Sensor current	0,25mA
Accuracy	± 0,1%
Time constant	0,2...1s
Additional electronic damping	0...30s
Ambient temperature	-40…+85°C
Dimensions (WxHxD)	12,5mmx99mmx114,5mm

Application and function

The temperature transmitter LI-24L is applicable to converting resistance of temperature or voltage of thermocouple sensor to standard current signal 4-20mA. The transmitters have two separate measuring channels enabling measurement of temperature difference, averange, averange with redundancy, max or min temperature. Transmitter has compensation of ambient temparature influence and compensation of thermocouple cold junction using internal/external (Pt100) sensor or constant temperature.
Most of parameters such as: sensor type, measuring range, current alarm signal when electric circuit is broken, output characteristic correction, user characteristic (60 points) are programmed using PC with HART/USB converter and Raport 2 configuration software.
For request Aplisens can set temperature transmitter parameters like measuring range, type of sensor. Their values are printed on label. Transmitter for rail mounting (TS-35).

Electrical diagrams

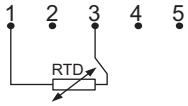

RTD 2-wires connection

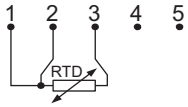

RTD 3-wires connection

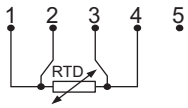

RTD 4-wires connection

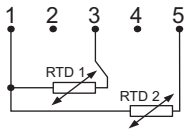

2 × RTD 2-wires connection

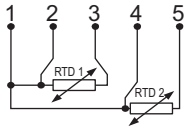

2 × RTD 3-wires connection

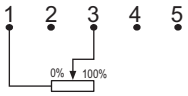

Potentiometer 2-wires connection

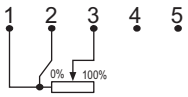

Potentiometer 3-wires connection

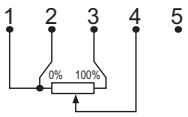

Potentiometer 4-wires connection

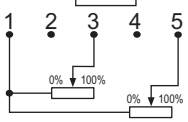

2 × Potentiometer 2-wires connection

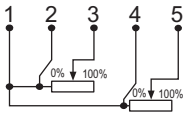

2 × Potentiometer 3-wires connection

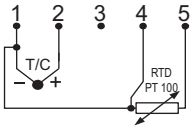

Thermocouple with external CJC

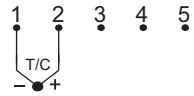

Thermocouple

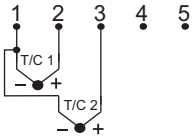

2 x Thermocouple

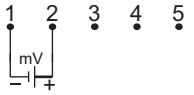

Voltage source

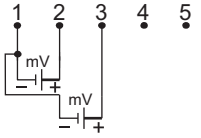

2 x Voltage source

LI-24L/___/___/___/___

Version: **Ex**, **Safety**, none

Sensor type

Measuring range

Alarm signal

Rail-mounted temperature transmitter type ATL

- ✓ **Programmable sensor type PT100 i Ni100**
- ✓ **Programmable measuring range.**
- ✓ **Thermoresistance line compensation (3 wires line)**
- ✓ **Output signal 4…20mA**
- ✓ **Rail- mounting system.**

Application and function

The temperature economical transmitter ATL is applicable to converting resistance of temperature sensor to standard current signal 4…20mA.
Most of parameters such as: sensor type, input signal, measuring range may be adapted by user for specific requirements of his measuring system.
The transmitter is programmed using PC with RS converter and Aplisens AT configuration software.
If you define type of sensor, measuring range in the order, then the transmitter is programmed with required parameters and their values are printed on serial number label.
Transmitter for rail mounting.

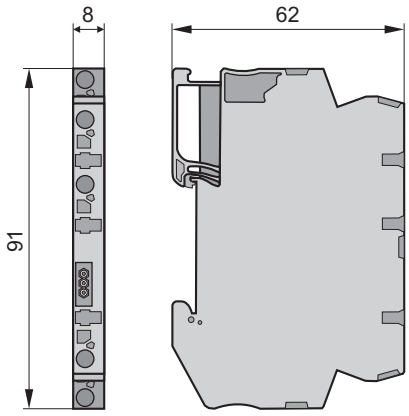

Technical data

Input signal	Pt 100, Ni 100
Limit process	20Ω <R<380Ω
Min. measuring range	10 Ω
Output signal	4 – 20 mA
Power supply	6…29V DC
Load resistance	R_o[kΩ]<(U_z – 7V)/25mA
Alarm signal	23mA or 3,8mA
Accuracy for ΔR>20Ω	± 0,2%
Thermal error	± 0,1% / 10°C
Ambient temperature	-25…+80°C
Error due to supply voltage changes	±0,1%

Ordering procedure.

ATL /___/___÷___°C/___

Sensor type:Pt100,Ni100

Measuring range

Alarm signal

Example: temperature transmitter ATL, sensor type Pt100, measuring range 0…100°C, alarm signal 23mA.

ATL/Pt100/ 0…100°C/23mA

Electrical diagrams

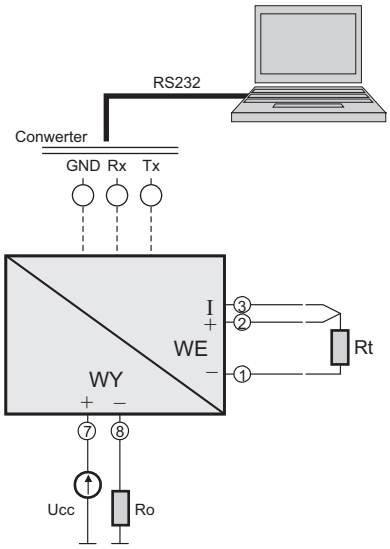

Head-mounted smart temperature transmitter type LI-24G

SIL2/SIL3 Safety version

HART COMMUNICATION PROTOCOL

- ✓ **Galvanic insulation (In, out)**
- ✓ **Programmable sensor type**
- ✓ **Programmable measuring range**
- ✓ **Resistant thermoresistance line compensation**
- ✓ **Compensation of thermocouple cold junction**
- ✓ **Output signal 4…20mA + Hart protocol**
- ✓ **Ambient temperature from -25 to +75 °C**
- ✓ **Hart protocol**
- ✓ **Safety version SIL2/SIL3**
- ✓ **Intrinsic Safety version**

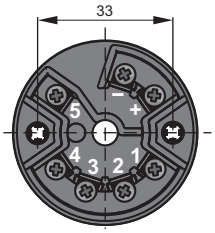

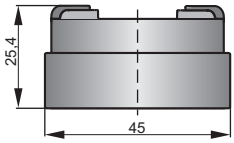

Ex I M1 Ex ia I Ma
II 1G Ex ia IIC T5/T6 Ga
II 1D Ex ia IIIC T105°C Da

IECEx Ex ia I Ma
Ex ia IIC T5/T6 Ga
Ex ia IIIC T105°C Da

Technical data

Input signal	L, K, J, S, B, N, T, R, E voltage Pt10, Pt50, Pt98, Pt100, Pt200, Pt500, Pt1000, Ni100, Cu50, Cu100, resistance
Limit process	- 10mV< E<100mV or -100mV< E<1000mV 0Ω<R<400Ω or 0Ω<R<2000Ω
Min. measuring range	10mV or 10Ω
Output signal	4...20mA + HART
Power supply	10...36V DC Safety: 10...36V DC Ex, Safety Ex: 10...30V DC
Max. sensor resistance	150Ω/200Ω
Alarm signal	21,6mA or 3,75 mA or setting by user
Sensor current	0,42mA
Accuracy	± 0,1%
Time constant	0,2...1s
Additional electronic damping	0...30s
Ambient temperature	-40...85°C Ex, Safety Ex: -40...70°C

Application and function

The temperature transmitter LI-24G is applicable to converting resistance of temperature or voltage of thermocouple sensor to standard current signal 4-20mA. The transmitter has two separate measuring channels enabling measurement of temperature difference, average, average with redundancy, max or min temperature. Transmitter has compensation of ambient temparature influence and compensation of thermocouple cold junction using internal/external (Pt100) sensor or constant temperature.
Most of parameters such as: sensor type, measuring range, current alarm signal when electric circuit is broken, output characteristic correction, user characteristic (60 points) are programmed using PC with HART/USB converter and Raport 2 configuration software.
For request Aplisens can set temperature transmitter parameters like measuring range, type of sensor. Their values are printed on label.

Electrical diagrams.

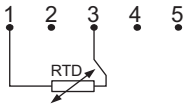

RTD
2-wires connection

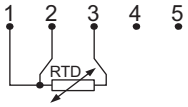

RTD
3-wires connection

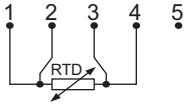

RTD
4-wires connection

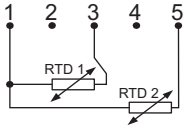

2 × RTD
2-wires connection

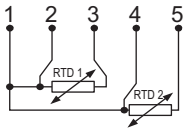

2 × RTD
3-wires connection

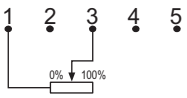

Potentiometer
2-wires connection

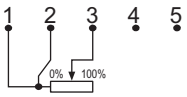

Potentiometer
3-wires connection

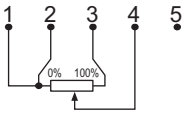

Potentiometer
4-wires connection

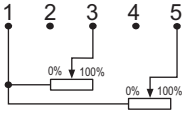

2 × Potentiometer
2-wires connection

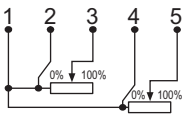

2 × Potentiometer
3-wires connection

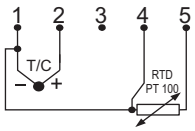

Thermocouple
with external
CJC

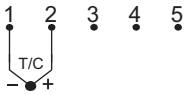

Thermocouple

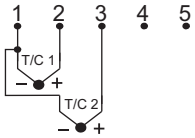

2 x Thermocouple

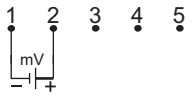

Voltage source

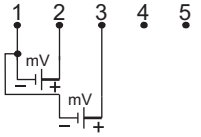

2 x Voltage source

LI-24G /___/___/___/___

Version: **Safety**, **Ex**, none

Sensor type

Measuring range

Alarm signal

Head-mounted temperature transmitter type AT-2

- ✓ **Sensor type PT100 or Ni100**
- ✓ **Thermoresistance line compensation (3 wires line)**
- ✓ **Output signal 4…20mA**
- ✓ **Head- mounting system.**

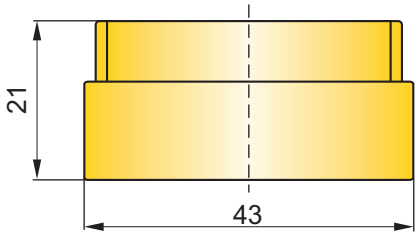

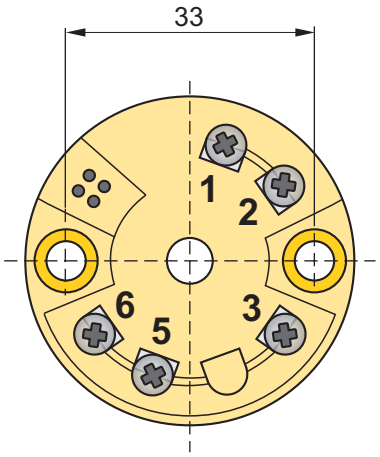

Application and function

The temperature economical transmitter AT-2 is applicable to converting resistance of temperature sensor to standard current signal 4…20mA. Most of parameters such as: sensor type, input signal, measuring range may be adapted by user for specific requirements of his measuring system.

User define type of sensor, measuring range in the order, the transmitter are programmed with required parameters and their values are printed on serial number label.
Transmitter for head mounting.

Technical data

Input signal	Pt 100
Limit process	20Ω <R<380Ω
Min. measuring range	25C°
Output signal	4 – 20 mA
Power supply	7,5…30V DC
Load resistance	R_d[kΩ]<(U_z – 7,5V)/22mA
Alarm signal	22mA or 3,6mA
Accuracy for ΔR>20Ω	± 0,1%
Thermal error	± 0,1% / 10°C
Ambient temperature	-40…+85°C
Error due to supply voltage changes	±0,01%/V

Note: for spans smaller than 75°C, the only permissible start values are: -40°C, -20°C, 0°C, +20°C and +40°C.

Electrical diagrams

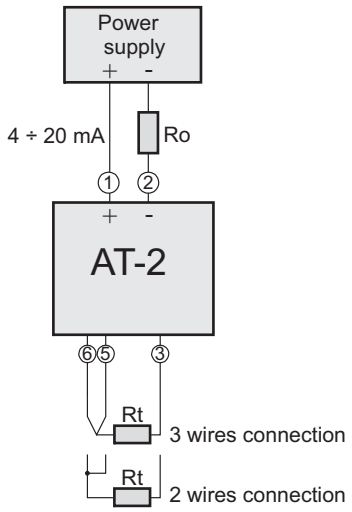

Ordering procedure.

AT-2 /___/__÷__°C/___

Sensor type:Pt100,Ni100

Measuring range

Alarm signal

Example: temperature transmitter AT-2, sensor type Pt100, measuring range 0…100°C, alarm signal 22mA.

AT-2/Pt100/ 0…100°C/22mA

Head-mounted temperature transmitter type ATX-2

- ✓**Sensor type: Pt100, Pt500, Pt1000, Ni100**
- ✓**Thermoresistance line compensation**
- ✓**Output signal 4…20mA**
- ✓**ATEX certificate Ex II 1G Ex ia IIC T6**
- ✓**Head-mounting system.**

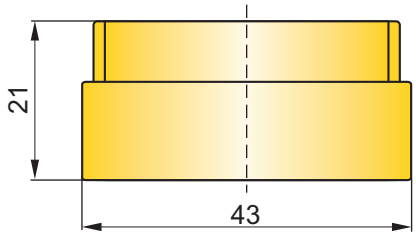

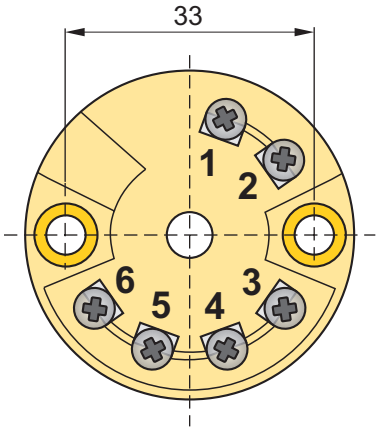

Application and function

The temperature transmitters are applicable to converting resistance of temperature sensor to standard current signal 4…20mA.
Most of parameters such as: sensor type, input signal, measuring range, may be adapted by user for specific requirements of his measuring system.
User define type of sensor, measuring range in the order, the transmitter are programmed with required parameters and their values are printed on serial number label.
Transmitter for head mounting.

Technical data

Input signal	Pt,Ni
Min.measuring range	10°C
Output signal	4–20mA
Power supply	8…30VDC
Load resistance	R_d[kΩ]<(U_z–8V)/22mA
Alarm signal	21mAor3,5mA
Accuracy for ΔR>20Ω	±0,2%
Thermal error	±0,05%/10°C
Ambient temperature	-40…+85°C

Accuracy:

PT100: -100÷200°C	±0,2°C	PT1000: -100÷200°C	±0,2°C
PT100: -200÷850°C	±0,4°C	PT1000: -100÷250°C	±0,4°C
PT500: -100÷200°C	±0,2°C	Ni100: -60÷250°C	±0,2°C

Electrical diagrams

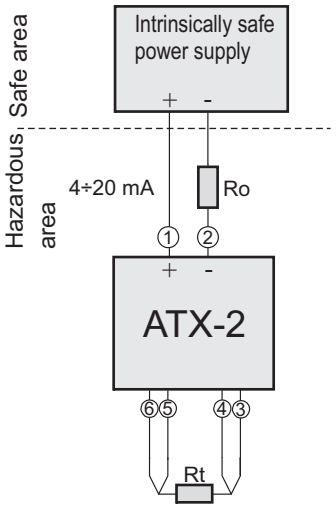

Input parameters

Input terminals 3, 4, 5, 6:
Uo = 9,6V, Io = 4,5mA, Po = 11mW,
Lo = 4,5mH dla IIC; 8,5mH dla IIB
Co = 709nF dla IIC; 1300nF dla IIB
Supply terminals 1(+) 2(-):
Ui = 30V, Ii = 100mA, Pi = 750mW, Li ~ 0, Ci ~ 0

Ordering procedure

ATX-2 /___/__÷__°C/___

Sensor type:Pt100,Ni100

Measuring range

Alarm signal

Example: temperature transmitter ATX-2, sensor type Pt100, measuring range 0…100°C, alarm signal 23mA.

ATX-2/Pt100/0…100°C/23mA

Head-mounted temperature transmitter type GI-22-2, GIX-22-2

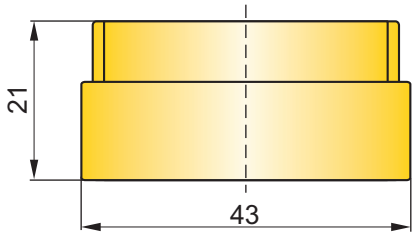

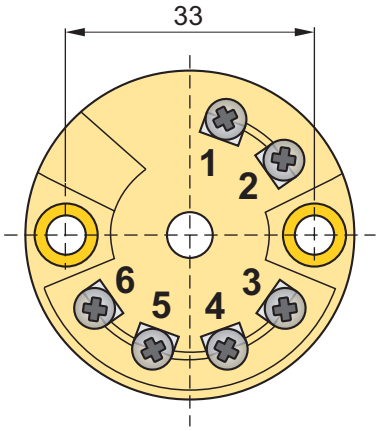

- ✓ **Galvanic insulation (In, out)e**
- ✓ **Thermoresistance line compensation (3 and 4 wires line)**
- ✓ **Compensation of thermocouple cold junction**
- ✓ **Output signal 4…20mA**
- ✓ **Head-mounting system**
- ✓ **Certificate ATEX Ex II 1G Ex ia IIC T6 (GIX-22-2 version).**

Application and function

The temperature transmitters are applicable to converting resistance of temperature or voltage of thermocouple sensor to standard current signal 4…20mA.
Most of parameters such as: sensor type, input signal, measuring range, may be adapted by user for specific requirements of his measuring system.
User define type of sensor, measuring range in the order, the transmitter are programmed with required parameters and their values are printed on serial number label.
Transmitter for head mounting.

Technical data

Input signal	J, L, U, T, E, K, N, S, R, B, Pt, Ni
Min. measuring range	10°C for Pt, Ni 50°C for J, L, U, T, E, K, N 500°C for S, R, B
Output signal	4 – 20mA
Power supply	8…35V DC 8-30V DC for GIX-22-2
Load resistance	$R_0[k\Omega]<(U_z – 11V)/25mA$
Alarm signal	22mA or 3,6 mA
Galvanic insulation	Optoelectrical
Accuracy	

PT100: -100÷200°C	±0,2°C	J: -210÷1200°C	±0,5°C	over -150°C
PT100: -200÷850°C	±0,4°C	L: -200÷900°C	±0,5°C	
PT500: -100÷200°C	±0,2°C	U: -200÷600°C	±0,5°C	
PT100: -200÷250°C	±0,4°C	T: -270÷400°C	±0,5°C	over -200°C
PT1000: -100÷200°C	±0,2°C	E: -270÷1000°C	±0,5°C	over -150°C
PT1000: -100÷250°C	±0,4°C	K:-270÷1372°C	±0,5°C	over -140°C
Ni100: -60÷250°C	±0,2°C	N: -270÷1300°C	±1°C	over -100°C
		S: -50÷1768°C	±2°C	over +20°C
		R: -50÷1768°C	±2°C	over +50°C
		B: 0÷1820°C	±2°C	over +400°C

Thermal error	±0,05 %/10°C
Voltage error	±0,01%/V
Ambient temperature	-40…+85°C

Electrical diagrams

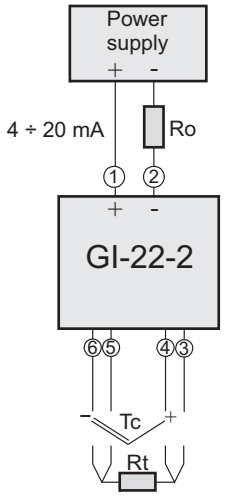

Ordering procedure

GIX-22-2 /___/__÷__°C/___

GI-22-2 /___/__÷__°C/___

Sensor type

Measuring range

alarm signal: 22mA or 3,6mA

Chapter X

Temperature sensors

Temperature sensor CT 25..... X/ 2

Temperature sensors with integrated protection tube or additional thermowell ..... X/ 3

Temperature sensor for high temperature applications ..... X/ 8

Temperature sensors without additional protection tube CT X..... X/ 10

Cable temperature sensor CT GE1, CT E1, CT R6,

CT E2..... X/ 12

Measuring insert, clamping grips..... X/ 13

Thermowells..... X/ 14

NEW

Temperature sensor type CT-25

- ✓ **RTD output signal**
- ✓ **Stainless steel casing and wetted parts**

Application and construction

Temperature sensor type CT-25 is designed for temperature measurement of liquid and gaseous media in range from -40 to +100°C. Casing of sensor and wetted parts are made in stainless steel. Available electrical connections are angular connector DIN EN 175301-803 or connector M12x1.

PD type
IP65

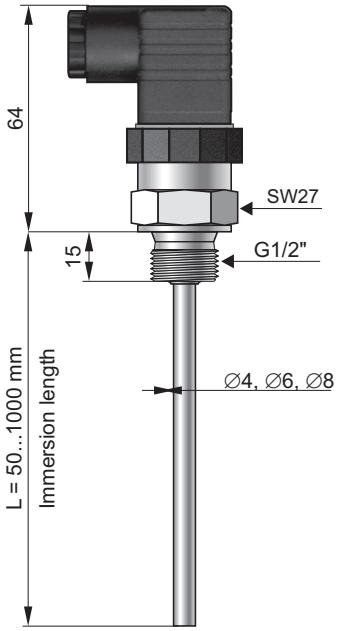

PM12 type
IP67

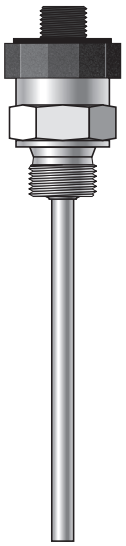

Technical data

Measuring range	-40...100°C
Accuracy	±(0,3+0,005|t|)°C (class B per IEC 60751)
Wetted parts material	316
Sensor diameter	∅4, ∅6, ∅8mm
Process connection	G1/2", other on request
Immersion length	50...1000mm
Extension neck	on request
Ingress protection	PD - IP65, PM12 - IP67

Ordering procedure

CT-25/___/L = ... mm/___/___/___/___

Electrical connection: **PD** (connector DIN EN 175301-803)
PM12 (connector M12x1)
Immersion length: **L=...mm** (standard: 50, 100, 150, 200, 250 mm other length on request)
Diameter of sensor: **4**, **6**, **8 mm**
Connection thread: **G1/2"**, other on request
Measuring element: **Pt100**
Number of wires: **2**, **3**, **2x2** (only in PM12 version)

TEMPERATURE SENSORS WITH INTEGRATED PROTECTION TUBE OR ADDITIONAL THERMOWELL TYPE CT

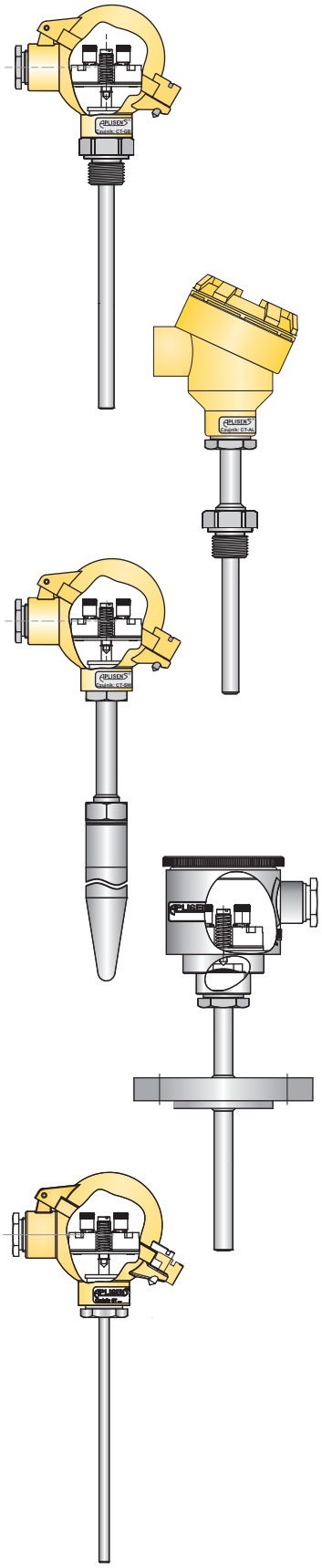

- ✓ **RTD (Pt100, Pt1000) and TC sensors**
- ✓ **ATEX Exia certificate**
- ✓ **ATEX Exd certificate**
- ✓ **DNV/GL marine certificate**

Features

Temperature sensors CT are offered as Pt100/Pt1000 resistance thermometers or thermocouples.

In resistance sensors (RTD) platinum resistors change their electrical resistance as a function of temperature. RTD, the most commonly used sensors in industry, are suitable for applications between -196…+600°C. The accuracy classes A and B are available with a tolerance acc. to IEC60751.

Thermocouples are made of two different conductors joined at the end. The temperature difference between junction, placed in measuring point (hot junction), and wire ends (cold junction), generate voltage proportional to the difference of temperature between these junctions. Thermocouples are suitable for the measurement of high temperatures, up to 1700°C.
The accuracy classes 1 and 2 are available with tolerance acc. to IEC60584.

Description

Temperature sensors model CT are offered in two designs:

- with integrated protection tube, fully welded and screwed into enclosure.
- for additional thermowell: machined from bar stock or from pipe.

In both cases sensors are equipped in spring- loaded measuring inserts which are replaceable. The interchangeable inserts can be replaced without dismounting sensor from installation. This enables inspection or, if necessary, service without stopping of running production process.

Sensors are suitable for gases and liquids. A large number of approvals and wide choice of process connections, connection heads, lengths of immersion and necks, types of measuring elements and materials of wetted parts allow for applications in:

- power industry
- chemical and petrochemical industry
-marine and offshore industry
- heavy industry
- food industry
- machine building
- plant construction

Technical details

Process part type	Measuring range
GB1	Pt100: -70…150°C Marine version: -25…150°C
GN1	Pt100: -70...500°C / -196…150°C 1) TC type J/K: -40…-550°C Marine version: -25…500°C
T1	Pt100: -70…500°C / -196…150°C 1) TC type J/K: -40…550°C Marine version: -25…500°C
P1	Pt100: -70…500°C / -196…150°C 1) TC type J/K: -40…550°C Marine version: -25…500°C
GB1X + thermowell	Pt100: -70…150°C Marine version: -25…150°C
GN1X + thermowell	Pt100: -70…500°C TC type J/K: -40…570°C Marine version: -25…500°C

1) On request

Accuracy		
For resistance thermoelements Pt100 acc. to PN-EN 60751:2009		
Class	Temperature range (°C)	Accuracy (°C)
A	-30...300	±(0,15+0,002·|t|)
B	-50...500	±(0,3+0,005·|t|)
For resistance thermocpuples K acc. to PN-EN 60584-1:2014		
Class	Temperature range (°C)	Accuracy (°C)
1	-40...375	±1,5
	375...1000	±0,004·|t|
2	-40...333	±2,5
	333...1200	±0,0075·|t|
For resistance thermocpuples J acc. to PN-EN 60584-1:2014		
Class	Temperature range (°C)	Accuracy (°C)
1	-40...375	±1,5
	375...700	±0,004·|t|
2	-40...333	±2,5
	333...750	±0,0075·|t|

Certification						
Exia	Ex	II 1/2 G Ex ia IIC T6...T1 Ga/Gb II 1D Ex ia IIIC T75°C Da		Ex	I M1 Ex ia I Ma	1)
Exd 2)	Ex	II 2G Ex d IIB+H_2T** Gb II 2D Ex tb IIIC T* Db	3)	Ex	II 1/2G Ex d IIB+H_2 T** Ga/Gb II 1/2D Ex tb IIIC T* Da/Db	4)
MR	Marine certificate DNV					

1) Only CT-CL version
2) Only CT-AL version
3) Location of complete equipment in zone 1 or 21
4) Measuring stem with screwed to the opening D2 of housing thermowell, with proper wall thickness (zone 0 or 20):
a) minimum 1,5mm, made of corrosion resistant steel or
b) minimum 1mm and fixed in protective thermowell (wall thickness minimum 1mm) made of corrosion resistant steel

Casing

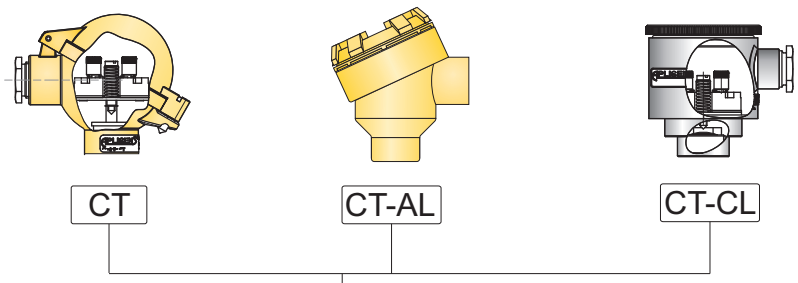

Process part

with integrated protection tube

for additional thermowell

GB1 | GN1 | T1 | P1 | GB1X | GN1X

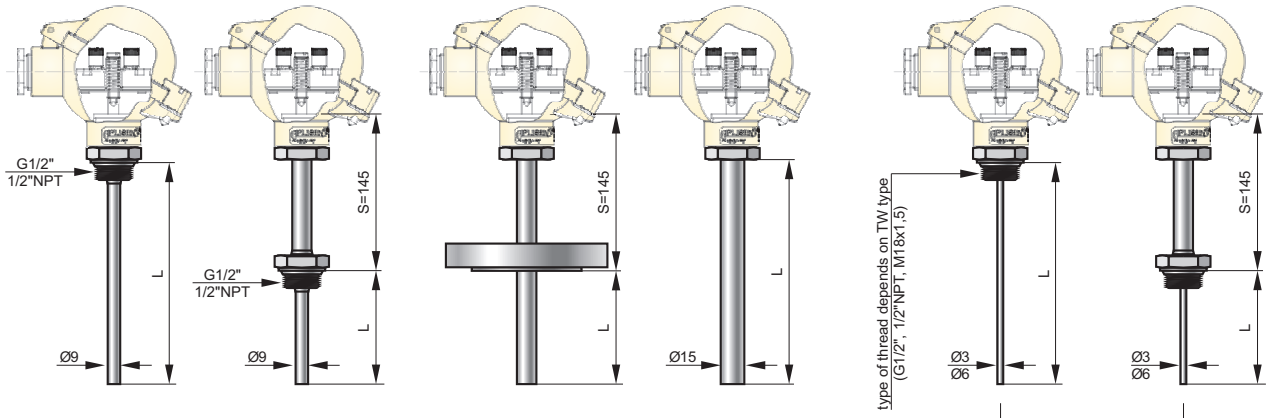

thermowell

OG2._ | OG3._ | T | SW2 | SW2T | SWG

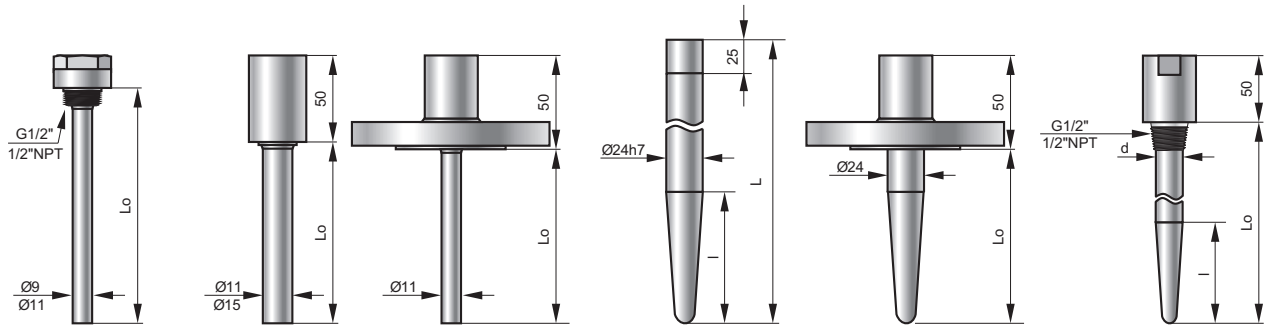

ORDERING PROCEDURE

Head Material		
CT		aluminum housing NA type
CT-AL		aluminum housing DAO type
CT-CL		stainless steel housing KO type

Process part		
sensors with integrated protection tube		
GB1		sensor with threaded process connection, diameter of sensor 9mm, 316ss
GN1		sensor with threaded process connection, diameter of sensor 9mm, neck S=145mm, wetted parts 316ss
T1		diameter of sensor 11mm, neck S=145mm, wetted parts 316ss
P1		diameter of sensor 15mm, wetted parts 316ss
sensors for additional thermowell		
GB1X		spring loaded sensor with threaded process connection, wetted parts 316ss
GN1X		spring loaded sensor with threaded process connection, neck S=145mm, wetted parts 316ss

Certificate				
x		standard version, no certificates		
Exia /II		Ex	II 1/2 G Ex ia IIC T6...T1 Ga/Gb II 1D Ex ia IIIC T75°C Da	
Exia /I		Ex	I M1 Ex ia I Ma	available in CT-CL housing only
Exd		Ex	II 2G Ex d IIB+H_2T** Gb II 2D Ex tb IIIC T* Db	available in CT-AL housing only, location of complete equipment in zone 1 or 21
Exd		Ex	II 1/2G Ex d IIB+H_2 T** Ga/Gb II 1/2D Ex tb IIIC T* Da/Db	available in CT-AL housing only, measuring stem with screwed to the opening D2 of housing thermowell, with proper wall thickness (zone 0 or 20): a) minimum 1,5mm, made of corrosion resistant steel or b) minimum 1mm and fixed in protective thermowell (wall thickness minimum 1mm) made of corrosion resistant steel
MR		marine certificate		

Measuring element		
Pt		Pt100
2xPt		2xPt100
Pt1000		Pt1000
J		TC type J
2xJ		2x TC type J
K		TC type K
2xK		2xTC type K

Class of element		
A/3		TR sensor, Class A, 3 wires
A/4		TR sensor, Class A, 4 wires
B/2		TR sensor, Class B, 2 wires
1/O		TC sensor, Class 1, ungrounded junction
2/O		TC sensor, Class 2, ungrounded junction

Thermowell		
x		no thermowell
OG2.9		welded type, ext. diameter 9mm, wetted parts mat. 316ss
OG2.11		welded type, ext. diameter 11m, wetted parts mat. 316ss
OG2.15		welded type, ext. diameter 15mm, wetted parts mat. 316ss
OG3.11		welded type, ext. diameter 11mm, wetted parts mat. 316ss
OG3.15		welded type, ext. diameter 15mm, wetted parts mat. 316ss
OGT1.11		welded type, ext. diameter 11mm, wetted parts mat. 316ss
OGT1.15		welded type, ext. diameter 15mm, wetted parts mat. 316ss
SWG		drilled type, ext. diameter 17mm, wetted parts mat. 316ss
SW2		drilled type, ext. diameter 24h7, wetted parts mat. 316ss,
SW2T		drilled type, ext. diameter 24mm, wetted parts mat. 316ss,

Process connection		
threaded type		
M20x1,5		thread M20x1,5
G1/2		thread G1/2"
1/2NPT		Thread 1/2"NPT
flange type		
DN25PN40		flange DN25PN40
DN40PN40		flange DN40PN40
DN50PN40		flange DN50PN40
ANSI 1" #150		flange ANSI 1" #150
ANSI 1,5" #150		flange ANSI 1,5" #150
ANSI 2" #150		flange ANSI 2" #150
Clamping grips		
UG15		diameter 15mm, thread M24x2

Length of immersion part L		
L= ….		required length of immersion [mm]

Equipment of housing				
KZ				terminal block
TR				wires connections for assembling of temperature transmitter
AT-2				transmitter 4...20mA model AT-2
ATX-2				ATEX transmitter 4...20mA model ATX-2
LI-24G				smart transmitter 4…20mA + HART model LI-24G
LI-24G/Ex				ATEX smart transmitter 4...20mA + HART model LI-24G/Ex
LI-24G/SIL2				SIL 2, smart transmitter 4...20mA + HART model LI-24G/SIL2
LI-24G/Ex/SIL2				SIL 2, ATEX smart transmitter 4..20mA + HART model LI-24G/Ex/SIL2
GI-22-2				transmitter 4...20mA model GI-22-2
GIX-22-2				ATEX transmitter 4...20mA model GIX-22-2
	Measuring range			
	…			set range [deg C]
		Alarm signal		
		HI		signal >20mA
		LO		signal <4mA
			Special version	
			ND=…	diameter of sensor or thermowell different than standard [mm]
			NE=…	length of neck different than 145mm [mm]
			NM…..	wetted parts material different than standard
			NPC…	process connection different than standard
			…	description of required parameters

Temperature sensor
for high temperature applications

✓ - TC sensors J, K, S, B
✓ - ATEX Exia certificate

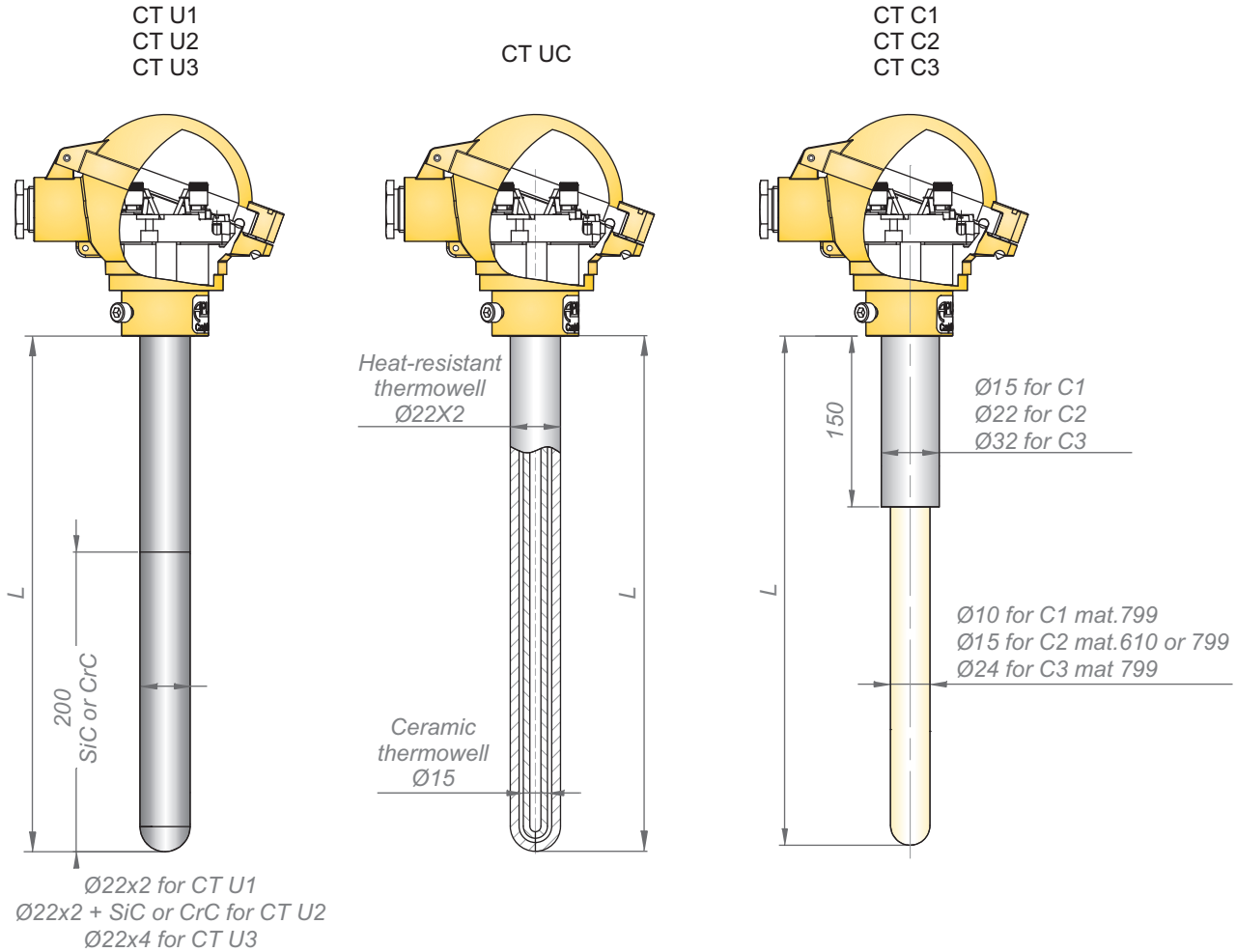

Features

Temperature sensors CT C, CT U, are offered as thermocouples.

Thermocouples are made of two different conductors joined at the end. The temperature difference between junction, placed in measuring point (hot junction), and wire ends (cold junction), generate voltage proportional to the difference of temperature between these junctions. Thermocouples are suitable for the measurement of high temperatures, up to 1700°C.
The accuracy classes 1 and 2 are available with tolerance acc. to IEC60584

Description

Temperature sensors model CTC and CTU are designed for high temperatures up to 1700°C.
Various wetted parts materials like heat resistant stainless steel, ceramic or sialon allow to cover many high temperature applications.

Sensors are offered with various fitting elements.
Typical application are:
- chemical application,
- metal alloys industry

Ordering procedure						
CT						
	Process part					
	U1					
	U2					
	U3					
	C1					
	C2					
	C3					
		Certificate				
		x				standard version, no certificates
		Exia /II			Ex	II 1/2 G Ex ia IIC T6...T1 Ga/Gb II 1D Ex ia IIIC T75°C Da
			Measuring element			
			J			TC type J
			2xJ			2x TC type J
			K			TC type K
			2xK			2xTC type K
			S			TC type S
			2xS			2xTC type S
			B			TC type B
			2xB			2xTC type B
				Class of element		
				1/O		TC sensor, Class 1, ungrounded junction
				2/O		TC sensor, Class 2, ungrounded junction
					Length	
					L= ….	required length of immersion [mm]
					S, L1, L2…=…	required length of immersion end extension [mm] – only CT-F
						Process connection
						X
						UC1-22
						UC2-22

TEMPERATURE SENSORS WITHOUT ADDITIONAL PROTECTION TUBE TYPE CT X

- ✓ **RTD (Pt100, Pt1000) and TC sensors**
- ✓ **ATEX Exia certificate**

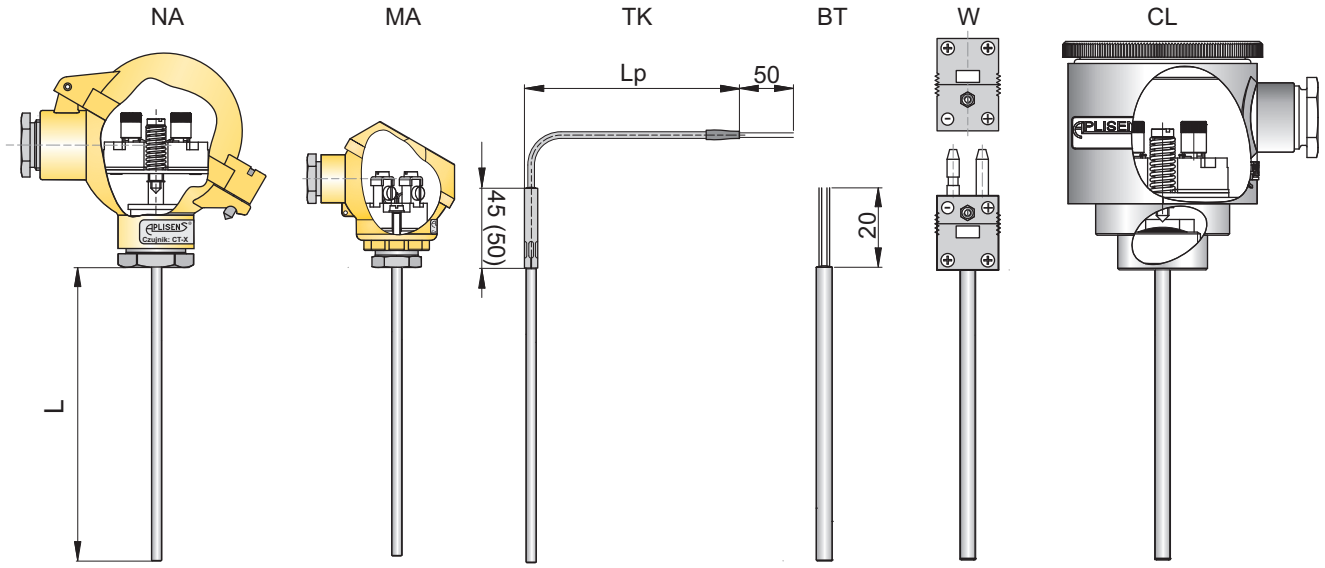

Features

Temperature sensors CT X are offered as Pt100/Pt1000 resistance thermometers or thermocouples.

In resistance sensors (RTD) platinum resistors change their electrical resistance as a function of temperature. RTD, the most commonly used sensors in industry, are suitable for applications between -200…+600°C. The accuracy classes A and B are available with a tolerance acc. to IEC60751.

Thermocouples are made of two different conductors joined at the end. The temperature difference between junction, placed in measuring point (hot junction), and wire ends (cold junction), generate voltage proportional to the difference of temperature between these junctions.

The accuracy classes 1 and 2 are available with tolerance acc. to IEC60584.

Description

Temperature sensors model CT X are offered without additional protection tube.

Small diameters and flexibility of process part allow for assembling in not easily accessible places.

Sensors are suitable only for non-aggressive or abrasive liquids and gases. Usually are mounted directly into the process. Sensors can be mounted also into thermowells, in this case is recommended assembling with spring-loaded fitting or using transmission liquid.

Sensors are offered with various screwed connections of for insertion, with fitting elements like union nuts. Typical application are:

- machine building
- temperature measurement in motors, bearings

Ordering procedure							
CTX							
	Diameter of sensor						
	3			3mm			
	6			6mm			
	8			8mm			
		Certificate					
		x		standard version, no certificates			
		Exia /II			Ex	II 1/2 G Ex ia IIC T6...T1 Ga/Gb II 1D Ex ia IIIC T75°C Da	
		Exia /I			Ex	I M1 Ex ia I Ma	available with KO housing only
			Measuring element				
			Pt		Pt100		
			2xPt		2xPt100		
			J		TC type J		
			2xJ		2x TC type J		
			K		TC type K		
			2xK		2xTC type K		
				Class of element			
				A/3	TR sensor, Class A, 3 wires		
				A/4	TR sensor, Class A, 4 wires		
				B/2	TR sensor, Class B, 2 wires		
				1/O	TC sensor, Class 1, ungrounded junction		
				2/O	TC sensor, Class 2, ungrounded junction		
					Length		
					L= ….	required length of immersion [mm]	
						Process connection	
						X	Without threaded connection
						UG/G1/2”	clamping grips with thread G1/2"
						UG/1/2”NPT	clamping grips with thread 1/2"NPT
						UG/G1/4”	clamping grips with thread 1/4"NPT
							Electrical connection
							BT
							TK
							W
							MA
							KO
							NA

Cable temperature sensors
type CT GE1, CT E1, CT R6, CT E2

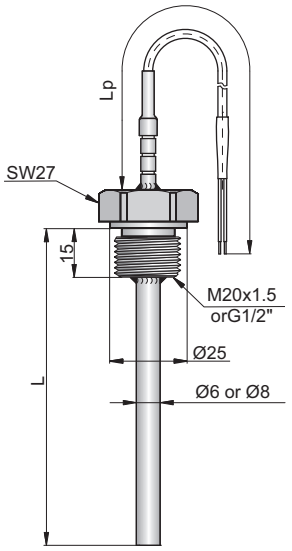

CT GE1

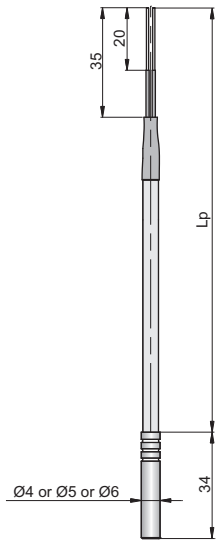

CT E1

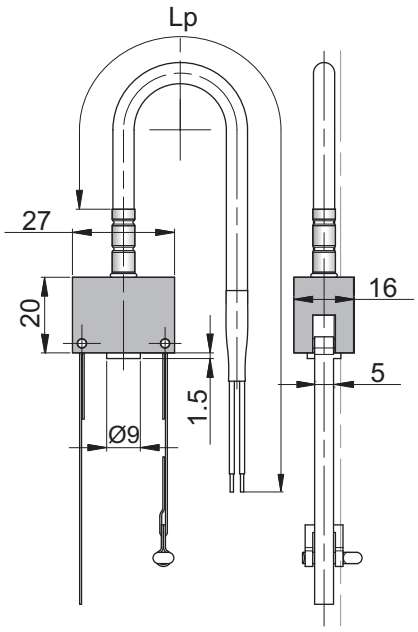

CT R6

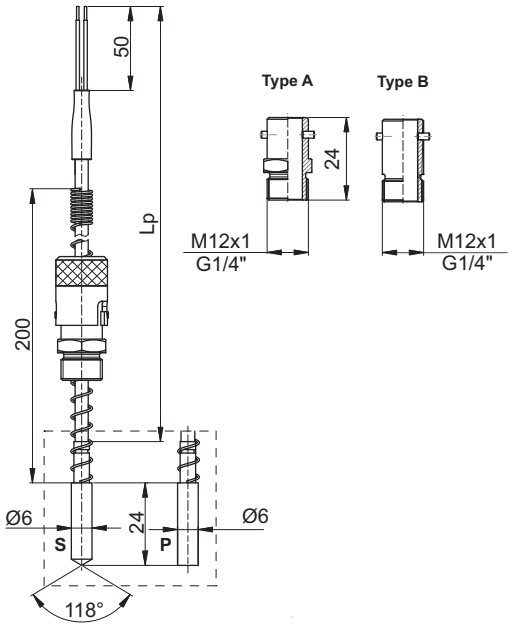

CT E2

Ordering procedure with example of ordering code:

CT	E1		Ø6	2000	Pt	A	4

- 4 — Wires numbers: 2, 3, 4- wires
- A — Class of measuring element: AA, A, B, C or 1, 2, 3
- Pt — Type and multiplicity of the measuring element: Pt, 2xPt
- 2000 — Cable length: Lp
- Ø6 — Diameter of sensor: 4, 5, 6 mm (*)
- (blank) — ATEX certificate: without Exia certificate
- E1 — Type of sensor

Certificate ATEX: Ex I M1 Ex ia I
II 1/2 G Ex ia IIC T6
II 1D Ex iaD 20 T75°C

ADDITIONAL INFORMATION:

1.(*) Non-standard lenght on demand.

Measuring insert W2, W4, W5

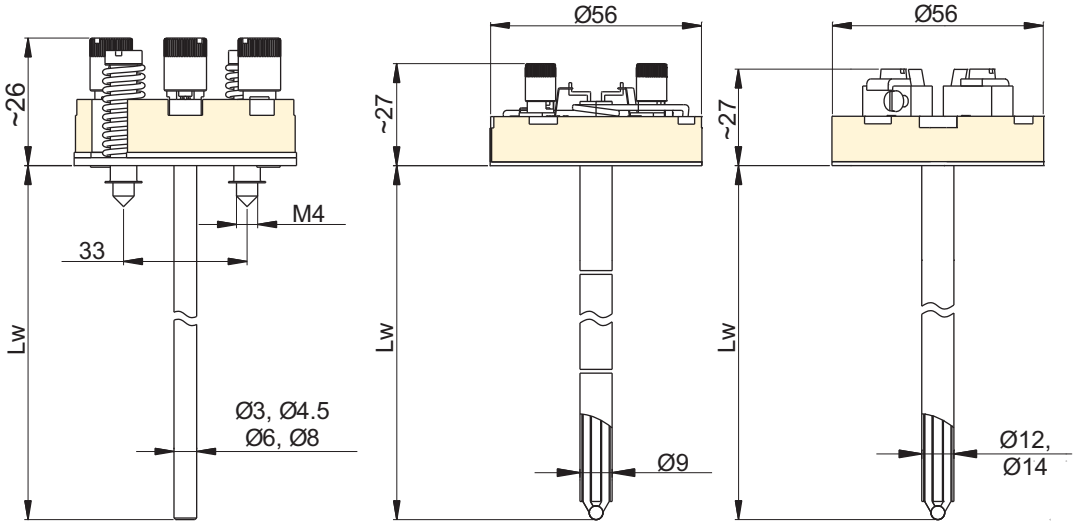

Ordering procedure

with example of ordering code:

CT – W2 – Ø8 – 405 – Pt100 – A – 3 – [ ]

- Type of junction: none or O, P.,Z
- Wires number: 2, 3, 4- wires (only for Pt100)
- Class of measuring element: AA, A, B or 1, 2
- Type and multiplicity of the measuring element: Pt, 2xPt or J, 2xJ, K, 2xK, S, 2xS, B, 2xB
- Mounting length: Lw - acc. to specification
- Diameter: Ø3, Ø4.5, Ø6, Ø8 / none for W4, W5
- Type of shield: W2, W4, W5

Measuring range of insert

	Insert type		
	W2	W4	W5
Pt	-70÷500°C/-196÷150°C**		
J	-40÷550°C		
K	-40÷550°C/-40÷1000°C	-40÷1000°C (1100°C)*	-40÷1000°C (1150°C)*
S		0÷1300°C (1600°C)*	
B		600÷1600°C (1800°C)*	
Shield	316/Inconel	Ceramic	Ceramic

* - value in the bracket is the maximum admissible momentary temperature
** - low temperature version

CLAMPING GRIPS APPLIED FOR MOUNTING THE TEMPERATURE SENSORS

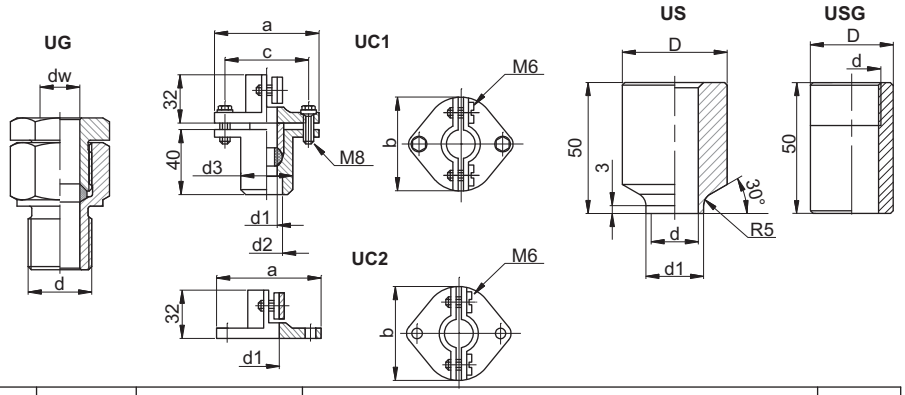

Type	Marking	Eksternal diameter of sensor's shield [mm]	Dimensions [mm]												Material
			dw	s	l	d	k	a	b	c	d1	d2	d3	D	
UG	UG6	6	6.5	22	16	M16x1.5	28								316ss
	UG8	8	8.5	22	16	M16x1.5	28								
	UG15	15	15.5	32	20	M24x2	32								
UC1	UC1-15	15						75	50	55	16	26	35		St30
	UC1-22	22						90	65	70	23	33	40		
UC2	UC2-15	15						75	50	55	16				St30
	UC2-22	22						90	65	70	23				
US	US18					Ø18H7					22			40	316ss 15HM 10H2M
	US24					Ø24H7					30			50	
USG	USG-M20x1,5 USG-G1/2" USG-1/2"NPT					M20x1,5 G1/2" 1/2"NPT								30	316ss 15HM

Admisible load: UG - 8MPa, UC1 - 0,1MPa

Ordering procedure with example of ordering code:

UG6 – 1.4301 – SC

- Sealing
- Material
- Type of clamping grip

Welded thermowells

OG1.9
OG1.11

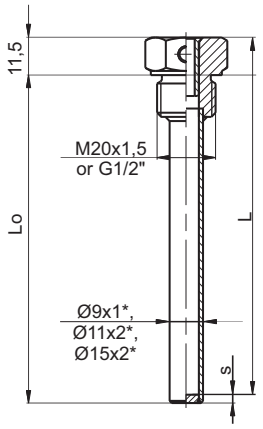

OG2.9; OG2.11
OG2.15

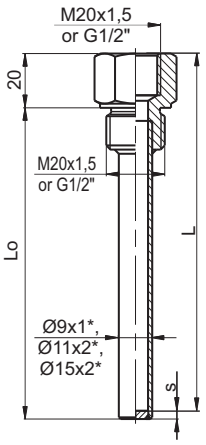

OG3.11; OG3.15

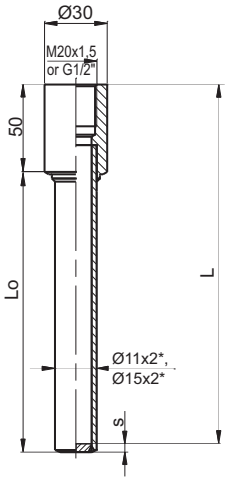

T1

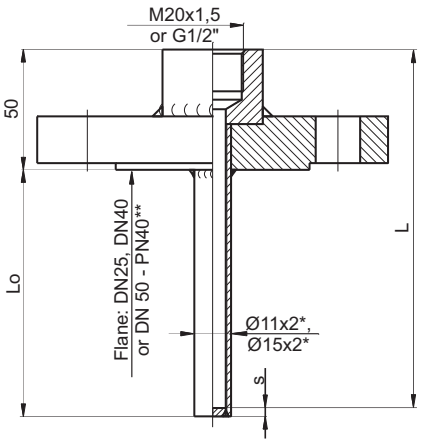

*Standard material: steel 316
s- depends on TW diamter

Drilled thermowells

SWG

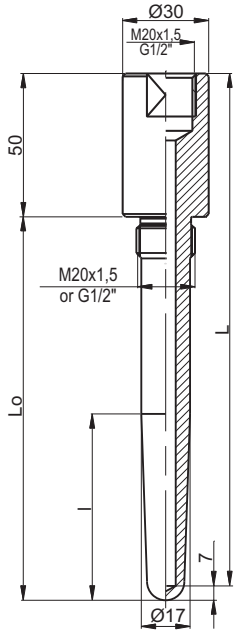

SW1 i SW2

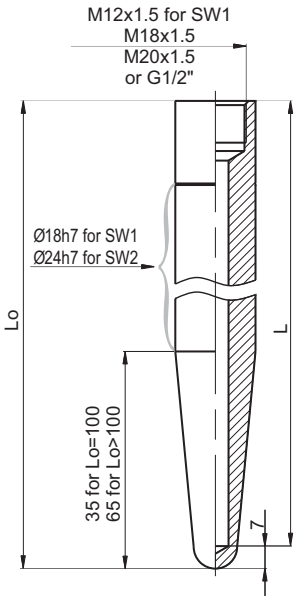

SW1T i SW2T

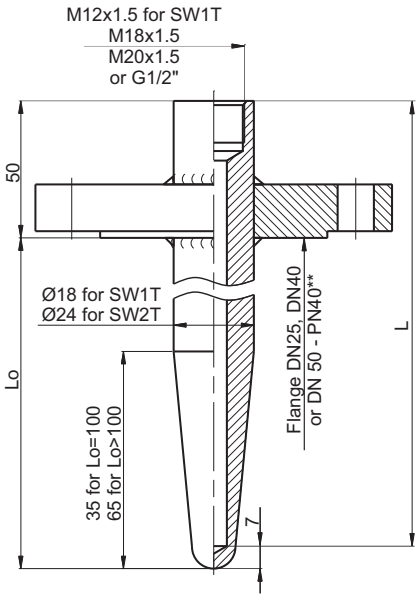

Standard material: steel 316, 1.7335 (13CrMo4-5,15HM), 1.7380 (10CrMo9-10, 10H2M)

Ordering procedure with exapmle of ordering code: OG2 – 100 – M20x1.5 – G1/2" – 1.4301 – 15x3

- OG2: Type of shield: OG..., T1, SWG, SW..., SW...T
- 100: Mounting length: L=100 mm (*)
- M20x1.5: Connection thread: external, none (*)
- G1/2": Connection thread: internal, none (*)
- 1.4301: Material (*)
- 15x3: Shield: Ø15x3 (*)

ADMISSIBLE LOADS FOR PARTICULAR TYPES OF SHIELDS AT SPECIFIED WORKING CONDITIONS

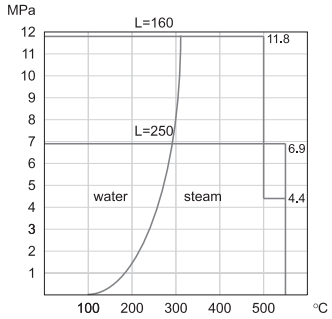

Graph 1. Admissible load of the G1 and T1 shields at the conditions of work - 15HM, 1H18N9T, H17N13M2T

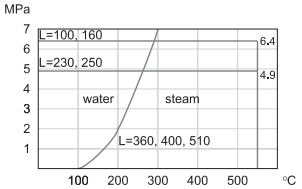

Graph 2. Admissible load of the GN1 and GB1 shields at the conditions of work - 15HM, 1H18N9T, H17N13M2T

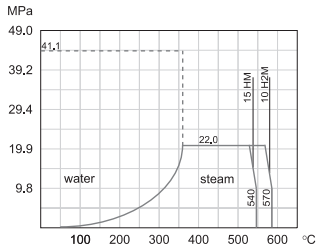

Graph 3. Admissible load of the SW1 and SW2 shields at the conditions of work

Notes

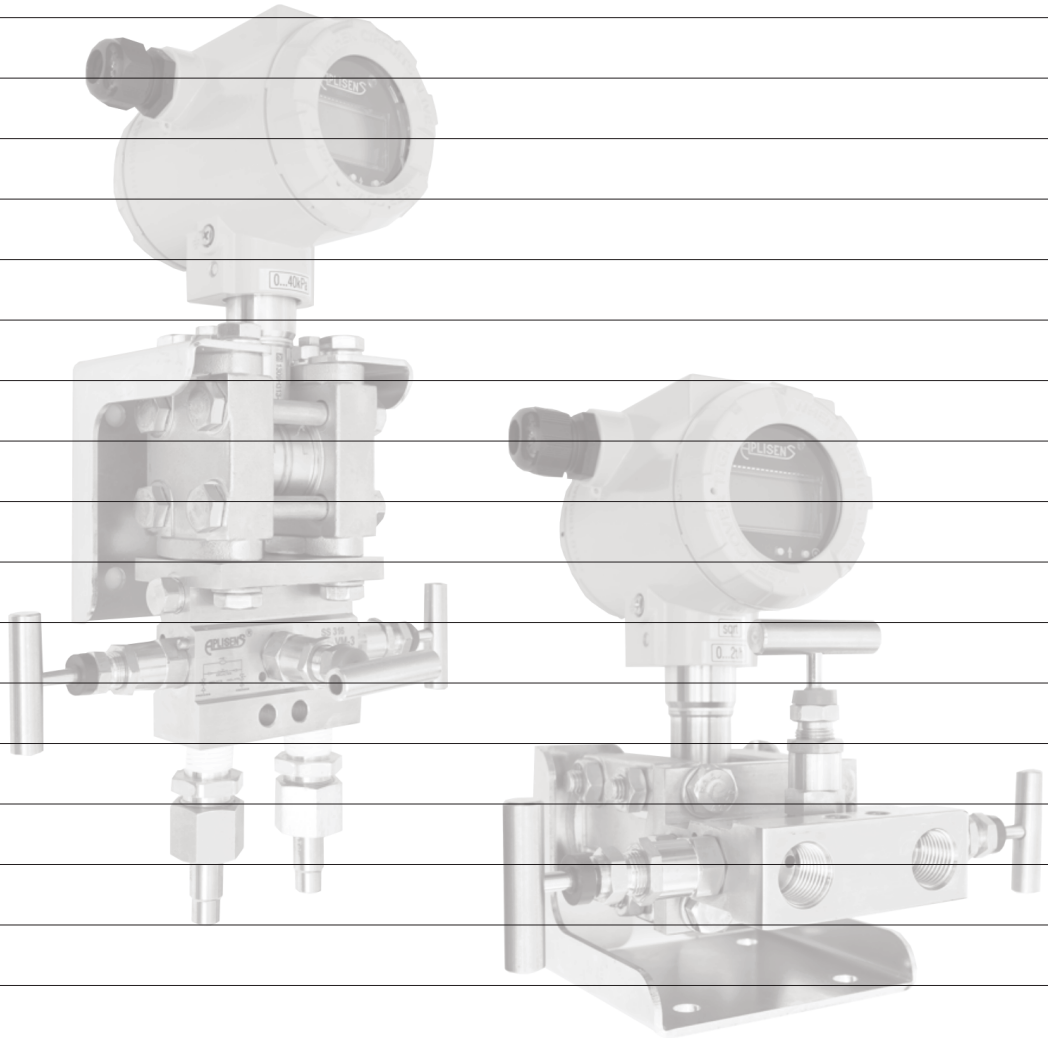

Chapter XI

Electropneumatic positioner

Electropneumatic positioner APIS..... XI/ 2

Electropneumatic positioner APIS

- ✓ **HART protocol**
- ✓ **ATEX certificate Ⓔx II 2G Exia IIC T5/T6 Gb**
- ✓ **Simple in installation and programming**
- ✓ **Possibility of remote assembling of positioner**
- ✓ **Low air consumption**
- ✓ **Programmable speed of movement of the actuator's piston rod**
- ✓ **Position transmitter**
- ✓ **Possibility of manual controlling of position of actuator's piston rod**

Technical data

Input signal (control)	4…20mA + Hart
Output signal (position transmitter)	4…20mA
Supply of position transmitter	10÷36 VDC (Ex 10÷30 VDC)
Supply pressure	140÷800 kPa
Pneumatic input signal (control actuator)	0…100% of supply pressure
Own air consumption	≤ 0,035 kg/h at supply voltage 140 kPa ≤ 0,015 kg/h at supply voltage 600 kPa
Air mass stream on positioner output	≥ 3,25 kg/h at supply voltage 140 kPa ≥ 13kg/h at supply voltage 800 kPa
Actuator piston rod displacement range	10÷100 mm (for single-acting linear actuators) 80÷900 mm (for double-acting linear actuators) 0÷180° (for rotational actuators)
Actuator operation characteristics	linear
Positioner operation mode	normal or reversible
Positioner transducer mode	normal or reversible
Additional errors	< 0,05% / 100kPa
- from supply pressure changes	0,15% / 10°C – for temperature range -30°C÷+60°C
- from ambient temperature changes	0,25% / 10°C – for temperature range -40°C÷-30°C and +60°C÷+85°C
- from vibration in range: 10...60Hz, amplitude < 0,35 mm 60....500Hz, acceleration 5g	0,25%
Hysteresis	< 0,4%
Insensibility threshold	< 0,1%
Protection degree of positioner enclosure	IP 65 according to PN-EN 60529:2003
Operation position	any
Weight	1,8 kg

Operating conditions

Working medium	air free of dust, oil, aggressive pollutants, solid particles bigger than 1.5 µm, such relative humidity not lower that dew point's temperature should not be lower than 10°C with respect to ambient temperature (acc. to PN-EN 60654-2:1999).
Ambient temperature Execution without manometers and with stainless steel manometers:	-40°C÷+85°C
Executions with manometers in stainless steel	
Humidity of ambient air	< 95%
Allowable vibrations	acc. to PN-EN 60654-3: 1997; class VH6
10...60Hz,	amplitude < 0,35 mm
60...500Hz	acceleration ≤ 5g

Ordering procedure

APIS - X X X – DXX – RXX – IHE – TXX – PX – MX – WX – AX

Intend use:

- for single-operating actuator	1
- for double-operating actuator	2

- for installation on actuator	0
- for installation outside actuator with	
external position transmitter (potentiometer) – IP54 [1]	1
external position transmitter (potentiometer) – IP67 [1]	2
external position transmitter (magnetic) – IP67 [1], [2]	3
external position transmitter (potentiometer) – IP65 [3]	4

Distance of positioner from actuator:

- … m (0 ÷ 15 m)	XX

Execution:

- standard	St
- intrinsically safe Ex II 2G Exia IIC T6/T5 Gb	EX

Analog position transmitter:

- without position transmitter	00
- with output signal 4÷20 mA [4]	20

Pneumatic connectors:

- without connectors (thread Rp1/8")	0
- connectors to brass pipes ∅6 mm	1
- connectors to stainless steel pipes ∅6 mm	2
- connectors to Polyethylene pipes ∅6 mm	3
- connectors to brass pipes ∅8 mm	4
- connectors to stainless steel pipes ∅8 mm	5
- connectors to Polyethylene pipes ∅8 mm	6
- connectors to Polyethylene pipes ∅6 mm (ERMETO)	7
- other	8

Manometers:

- with manometers in st. steel execution (∅40 mm, st. steel housing, glass window)	2
- with manometers in st. steel execution and st. steel wetted parts (∅40 mm, glass window)	3
- other	4

Electrical entry:

- plastic packing gland (∅4 ÷ 9 mm cable)	1
- nickeled brass packing gland (∅4 ÷ 9 mm cable)	2
- other	3

Mounting kit:

- without mounting kit	0
- with mounting kit (code according to below table)	1

[1] For double-operating linear actuator.
[2] Not available with ATEX
[3] For single-operating linear diaphragm actuators and single and double-operating rotational actuators
[4] The positioner can set reverse of analogue output signal (20…4 mA). The reverse function of the output signal is switched on programmatically by the user.

Mounting kit		Type of actuator
APIS-A000	For APIS-100-…	Type P or R, Polna S.A. (mounted on the columns)
APIS-A001		Type 37 or 38, Polna S.A. (yoke)
APIS-A002		Type P1 or R1, Polna S.A. (diaphragm multi-spring)
APIS-A003		Actuator acc.PN-EN 60534-6-1:2001 (Samson, Arca Regler)
APIS-A050	For APIS-X00-…	Actuator acc. EN ISO 5211, DIN 3337, VDI/VDE 38450 Namur, (Air Torque, Ebro-Armaturen, El-O-Matic)
APIS-AXXX	For APIS-201-…	Actuator acc. ISO 6431 (CNOMO Prema Kielce)
	-SS	Material: stainless steel
	-SO	Material: zinced steel

Chapter XII

Hart communication tools

KAP-03, Raport 2, HART/USB converter ..... XII/ 2

Communication tools

Raport 2 software

RAPORT 2 is a software designed for communication and data transfer from transmitters with Hart or Modbus protocol made by APLISENS.
The communication with the transmitters enables:
- Identification of a transmitter,
- Configuration of its output parameters:
- Reading of a PV values (e.g. pressure, output current, degree of output setting in %).
- Enforcement of output current with a given value,
- Transmitter calibration in relation to master pressure,
- Function linearization (user characteristic creator),
- Zeroing

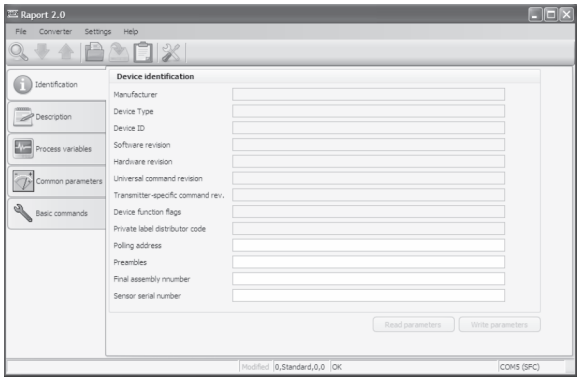

NEW

Aplisens Mobile Configurator

Aplisens Mobile Configurator is an Android application designed for communication and data transfer from transmitters with Hart or Modbus protocol made by APLISENS.
The communication with the transmitters enables:
- Supports wireless Bluetooth connection
- Read basic device information
- Configure device's Tag, Descriptor, Message, Address, etc.
- Monitor process variables
- Configure range and units
- Set/Unset write protection
- Configure specific features of pressure transmitters (LCD, alarms, transfer function, user variable

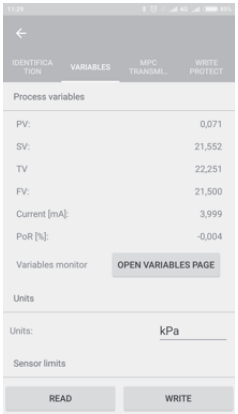

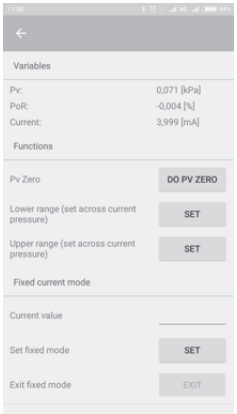

Hart Field Communicators KAP-03 and KAP-03Ex

Specification:

The **KAP-03 (KAP-03Ex)** HART field communicator is a portable battery supplied device used for communication and exchange of data with smart transmitters e. g. pressure, differential pressure transmitters. It features an output built as a standard current loop 4-20 mA, using FSK modulation type BEL 202 with an implemented HART communication protocol revision 5 and revision 6. The communicator is specially designed to configure smart transmitters manufactured by APLISENS.

Ordering procedure:

KAP-03/___/___

Ex - intrinsic safe version
Ex II 2G Ex ia IIC T4 Gb

P - software for pressure transmitetrs
T - software for temperature transmitetrs

HART/USB converter

HART/USB converter allows for connecting and configuration of Hart transmitters via USB port. It works also with devices equipped in Bluetooth.

Notes

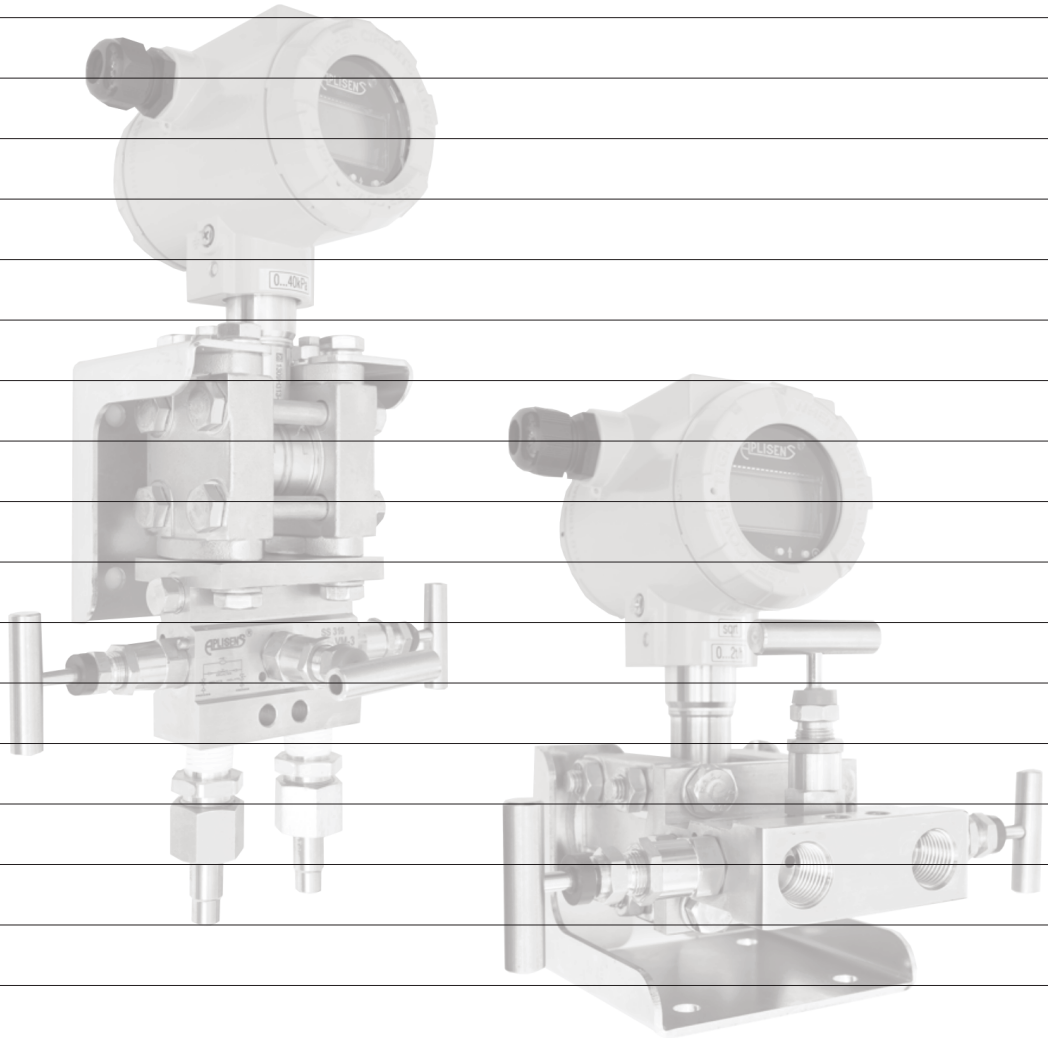

Notes

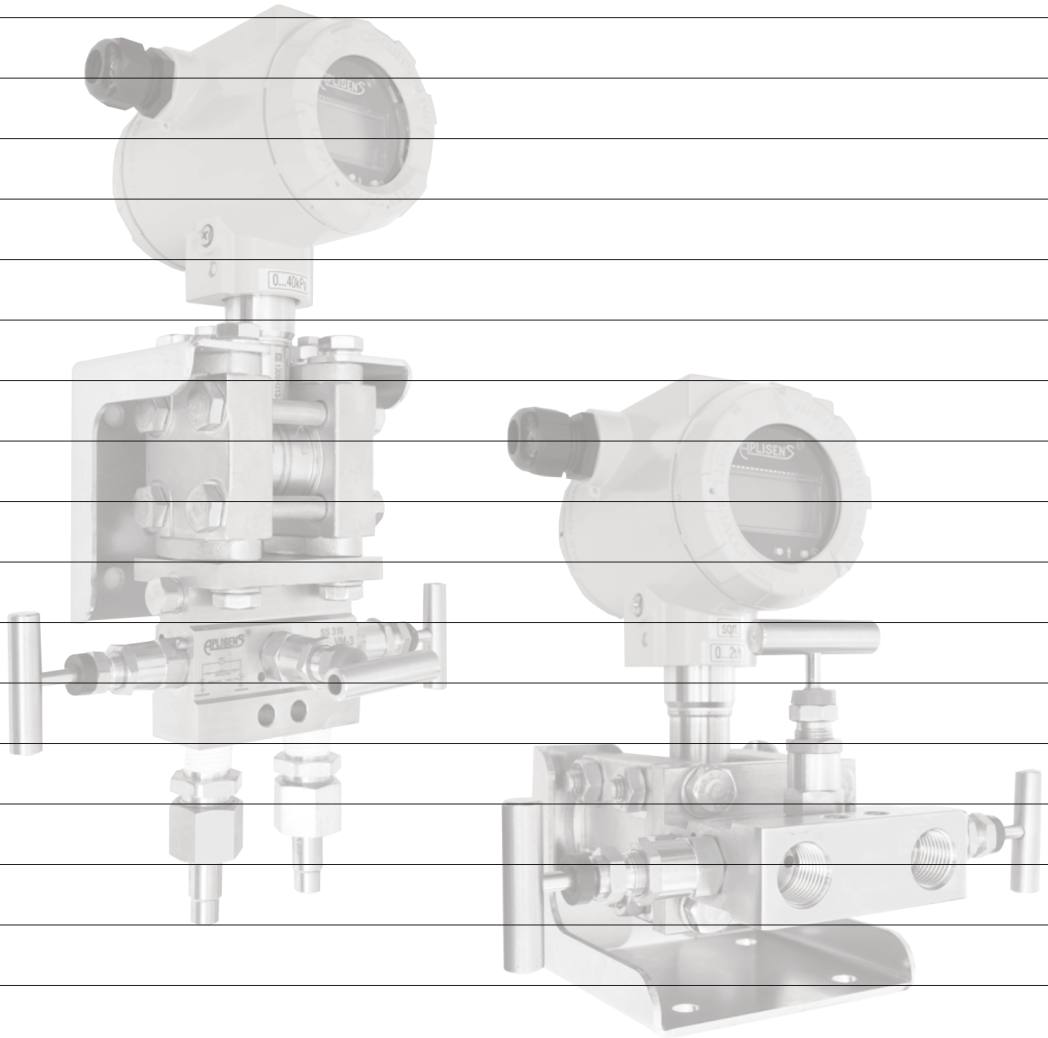

Notes

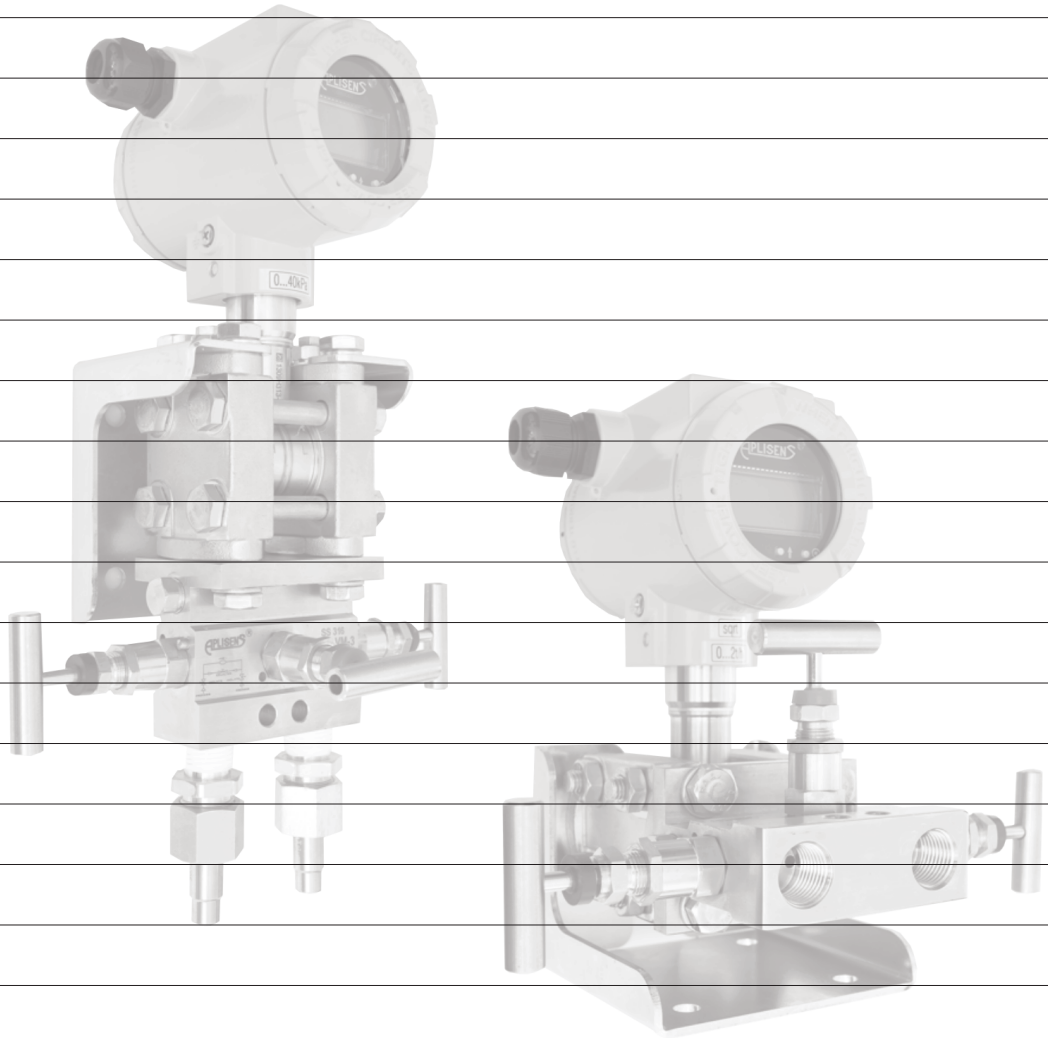

Unit Calculator

	kPa	MPa	bar	m H_2O	mm Hg	KG/cm^2	in H_2O	in Hg	psi
1 kPa =	1	0.001	0.01	0.102	7.501	0.0102	4.016	0.2953	0.14505
1 MPa =	1000	1	10	102	7501	10.2	4016	295.3	145.05
1 bar =	100	0.1	1	10.2	750.1	1.020	401.6	29.53	14.505
1 m H_2O =	9.807	0.009807	0.09807	1	73.56	0.1	39.37	2.896	1.4224
1 mm Hg =	0.13332	0.0001333	0.001333	0.01359	1	0.001359	0.5351	0.03937	0.01934
1 at = 1 KG/cm^2 =	98.07	0.09807	0.9807	10	735.6	1	393.7	28.96	14.224
1 in H_2O =	0.2491	0.0002491	0.002491	0.0254	1.8684	0.00254	1	0.07355	0.036126
1 in Hg =	3.386	0.003386	0.03386	0.3453	25.4	0.03453	13.60	1	0.4912
1 psi =	6.8948	0.0068948	0.068948	0.7031	51.715	0.07031	27.68	2.036	1

APLISENS S.A.
7 Morelowa St.,
03-192 Warsaw , POLAND
Tel. +48 22 814 07 77
Fax +48 22 814 07 78
export@aplisens.com
www.aplisens.com